ZIROX
Sensoren und Elektronik GmbH

ZIROX - Oxygen Measuring Technology



Oxygen Measuring Module ZR5

Manual

ZIROX Sensoren & Elektronik GmbH
Am Koppelberg 21, D-17489 Greifswald ☎+49 3834 8309 -00, Fax: -29 E-mail: info@zirox.de

ZIROX Sensoren & Elektronik GmbH
Am Koppelberg 21, D-17489 Greifswald ☎+49 3834 8309 -00, Fax: -29 E-mail: info@zirox.de

Table of Contents

Table of Contents 3
1 General description 5
2 Measuring principle 6
2.1 Basics 6
2.2 Special properties 7
3 Technical data 8
3.1 General data 8
3.2 Power supply and signal outputs 9
4 Initiation and operation 10
4.1 General construction of the device 10
4.2 Gas connection and flow rate 11
4.3 Installation and initiation 13
4.4 Operation and setting 14
4.5 Data recording and processing 16
5 Fault clearance 17
6 For interested RS232-users 18
7 Warranty conditions 20
8 Activated carbon filter: description and using instructions 21
8.1 Filter construction 21
8.2 Application and operation of the filter 21
8.3 Replacement 21
9 Mounting instructions for Swagelok®-fittings 22
10 Declaration of conformity 24

1 General description

The oxygen-measuring cell with control unit serves the continuous measuring of the oxygen concentration in technical gases. With it the measuring of the concentration of free oxygen in inert gases is possible but also the concentration of bound oxygen in gas mixtures (For measurements in reactive gas mixtures a special software is necessary).

With the ZR5 – module:

- The oxygen concentration is measured and displayed continuously.
- Deviations of the oxygen concentration from an adjustable set point are signalized.
- The procedure of special production processes under inert gas is monitored.
- Inert gases are monitored and the chemical protection effect is checked.

The introduction of halogens in high concentration and sulphurous gases (e.g. SO_2) into the cell leads to a destruction of the sensor. Furthermore, the electrodes of the sensor can be damaged irreversibly by typical catalyst poisons (e.g. Pb compounds) or by deposition of carbon.



The use of the measuring cell in explosive rooms or the use of explosive gas mixtures is not permitted.



The introduction of liquids (condensate formation) leads to the destruction of the cell. In this case, a condensate trap is required.

2 Measuring principle

2.1 Basics

Basis for the determination of the oxygen concentration in gases is the NERNST equation:

$$U = \frac{RT}{4F} \ln \frac{p_{O2,\,meas.gas}}{p_{O2,\,air}} \quad \textbf{(I)}$$

U – Cell voltage in mV

R – molar gas constant, R = 8.31 J/ (mol · K)

F – Faraday-constant F = 9.64 10^4 C/mol

T – measuring temperature in K

$p_{O2,Luft}$ –partial pressure of the oxygen at the reference electrode in dry air in Pa

$p_{O2,meas.\,gas}$ – partial pressure of the oxygen at the measuring electrode in the

An electrical heater heats the measuring cell. A thermocouple delivers a temperature signal for the temperature controller located in the control unit. The temperature should be chosen in a range of 750 ⋯ 800° C.

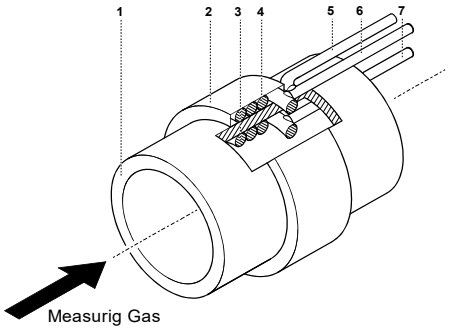

1	solid electrolyte tube
2	ceramic coverage of the measuring electrode
3	reference electrode
	measuring electrode
4	thermocouple
5	connection wire of the measuring electrode
6	connection wire of the reference electrode
7	

Fig. 1: *Construction of the measuring cell*

The measuring cell (sensor) consists of a tube made of zirconium dioxide (1) with two platinum electrode wires. Inside the tube, there is a measuring electrode (3). The reference electrode (4) is located at the outer side of the tube and has a constant electrode potential. The measuring gas flows through the ceramic tube. The electrodes and the ceramic tube form a galvanic solid electrolyte-measuring cell.
To gain a higher oxide ion conductivity of the zirconium dioxide tube, the sensor is heated up to 750°C. This also avoids interfering reactions at the electrode with combustible components of the measuring gas due to chemical non-equilibrium. A thermocouple (5) inside the measuring cell delivers the actual sensor temperature. A heater control ensures a constant temperature.

Based on the assumption that the total pressures of the gases are almost the same at both electrodes (in this case, the volume concentrations may be used in the calculation instead of the partial pressures) and replacing the parameters by numbers in equation (**I**), the following equation is valid:

$$\varphi_{O_2} = 20.64 \cdot e^{(-46.42 \cdot \frac{U}{T})} \quad \textbf{(II)}$$

φ_{O_2} – Oxygen concentration in vol%

U – Potential difference in mV

T – Measuring temperature in K

20.64 - O_2-concentration in air with a relative humidity of 50% in vol%

2.2 Special properties

The oxygen can occur in the measuring gas in free (free oxygen) or in bound mode. The oxygen in inert gases without reactive components or in combustion plants after complete combustion at oxygen excess is named free oxygen.

The oxygen, which reacts with reducing gas components (setting chemical equilibrium) at oxygen deficiency, is named equilibrium oxygen. The law of mass action determines this equilibrium oxygen. It can take extreme low values.

The oxygen can be measured in either free or bound form. The following dependencies are valid:

$U \sim T$ – for free oxygen (I)

$U \sim \frac{1}{T}$ – for bound oxygen (II)

Equation **(II)** applies to measuring gases with free oxygen as well as reducing gas mixtures in which oxygen is available only in bound form (e.g. in H_2/H_2O- or CO/CO_2-mixtures) [1].

[1] Different conditions of oxygen in the measuring gas must be distinguished:

Free oxygen: Oxygen molecules in the gas are independent without a bond to other gas components (inert gases such as N_2 or Ar).

Bound oxygen: Free oxygen molecules do not exist in the gas, only in bound form e.g. as water vapor. Higher temperatures cause a dissociation and oxygen molecules are available. Since the dissociation degree increases with the temperature, the measurement result depends on the temperature.

3 Technical data

3.1 General data

Range	100 vol%...1 vol-ppm (optional till 10^{-20} vol-ppm)	
Accuracy	Relative error < 5 %	
Response time	T_{90} (of the sensor element) 1 sec, response time of the module is dependent on the layout of the measuring gas tube	
Housing	19“-drawer / 21 depth units – 3 height units	Others possible
Dimensions (B x H x D)	100 mm x 105 mm x 170 mm	
Signal outlet	Analog output 4...20 mA (scaling by software) and serial interface RS232	0…10 V on request
Power supply	24 VDC ± 10 %, approx. 20 W	
Display	None, operation via software	
Protection degree	IP 20	
Operating temperature	0…50 °C	
Storage temperature	-20…60 °C	
Gas connections	Inlet: 3 mm Swagelok (1/8”, 1/4”, 6 mm on request) Outlet: hose nipple 4mm	
Gas supply	Via internal pump	Measuring gas must pass the device via bypass
	Option (e.g. for measuring gas with overpressure): Device has no internal pump! The device must be protected against too high overpressure, e.g. by needle valve! **For pressure > 3 bar, an additional pressure reducer is necessary!**	Measuring gas is pushed through the device by small overpressure (< 100 mbar) Attention: a constant flow (8l/h) must be ensured!
Environmental pressure	950...1100 hPa	Measurement is pressure-dependent
Warm-up	< 10 min	
Calibration	Calibration-free, zero-point adjustment (asymmetry adjustment) by the user in ambient air	
Mounting	Vertically or horizontally on suitable mounting surfaces	
Cross-sensitivity	None, but reducing gas components consume oxygen (Measurement of the equilibrium oxygen concentration	

3.2 Power supply and signal outputs

Power supply and current output occur via 4pol. plug.

Analog output: Current output 0/4 - 20 mA (potential-free)

Plug assignment:

1	+ 24 V DC
2	GND
3	I_{out} +
4	I_{out} +

Digital output: ..... RS 232-Interface (9600 Baud)

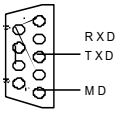

Pin assignment RS 232

The RS232 interface must be connected with a computer by SUB-D-Cable (9pol., 1:1, uncrossed)!

Transfer rate: max. 9600 Baud, adjustable

Stop bits	1	Parity	none
Data bits	8	Handshake	without

Protocol of the serial interface (CR = carriage return)

Set	Feedback signal/ example	Transferred measuring value	Parameter
M2CR	M2x.xxExxCR M22.06E+05	2.06*10^5 ppm O_2	Oxygen concentration in ppm
A1CR	A1xxx.xCR A120.9	20.9 mV	Cell voltage in mV
A2CR	A2xxx.xCR A2749.9	749.9 °C	Measuring temperature in °C

Settings of the parameter by software (see 4.5). Other PC-software for display and storage of the measuring values is available on request (see 4.6).

Error messages

ERROR0	Transfer error RS232 (or wrong command)
ERROR1	Warm-up (Cell temperature too low and less than 30 min)
ERROR2	Cell temperature too low (< Set temp. – 10 °C, more than 30 min)
ERROR3	Thermocouple broken
ERROR6	System error

4 Initiation and operation

4.1 General construction of the device

The device has a compact housing.

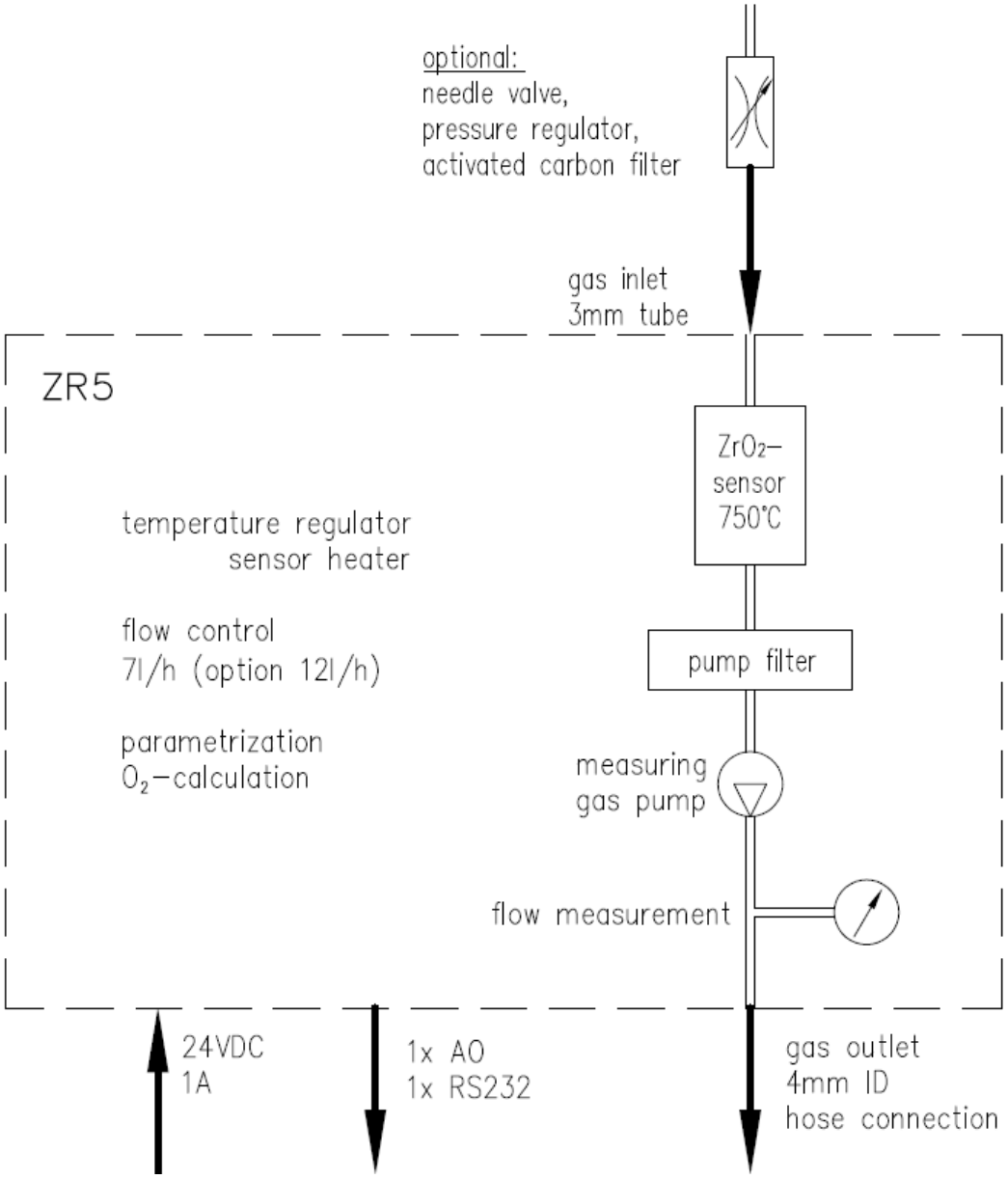

Fig. 2: *General construction, components*

The measuring gas is lead through the device by overpressure (if necessary, a needle valve must be used for fine regulation of the pressure) or by suction with a pump.

4.2 Gas connection and flow rate

The gas in- and outlet is on the rear of the module (fig. 3). Please note that for measurements under 100 vol-ppm O_2 stainless steel tubes are necessary (for minimum measuring errors, see 4.3).

NOTE

For exact measurements, a gas flow between 5 and 10 l/h of the measured gases must be ensured. If the flow is higher or lower than indicated, an additional measuring error occurs.

NOTE

If the flow rate is too low, measuring errors are caused by contamination in the gas tubes (leaks, permeability, desorption). If the gas flow rate through the sensor is too high, asymmetric cooling of the sensor electrode may cause additional measuring errors.

The ZR5-module (standard model) has an internal pump, which realizes an optimum flow rate of 8 l/h. The pump can be switched on/off in the settings menu.



Fig. 3: Rear of the ZR5-module

To reduce the measuring error at low oxygen concentrations, the following advice must be considered:

- The measuring gas must be taken from a location where the measuring gas has a homogeneous concentration of its substances.
- The pipe from the measuring point to the ZR5 - module must be as short as possible in order to avoid a change in the chemical balance in the pipe.

- All gas inlet and outlet pipes must be free of leaks.
- For measurements of oxygen concentrations of less than 1000 ppm, the use of steel tubes is necessary.
- If the measured gas contains reducing components (e.g. alcohol), the concentration of free oxygen cannot be determined correctly as chemical reactions occur at the electrode. In those cases, the measured gas should be filtered by an active carbon filter before entering the ZR5 – module.

4.3 Installation and initiation

After transport from cold surroundings to the site of operation with higher environmental temperature or atmospheric humidity, a waiting period of at least two hours for temperature compensation has to be allowed before switching on the ZR5 - module.

NOTE

The ZR5 has to be set up in a dry and extensively dust-free room on a stable, flat pad.

NOTE

The ZR5 has to be connected with 24V DC by 4pol. plug at the rear of the device.
In the proximity of the installation site, heat sources or pieces of equipment, which produce strong magnetic fields (e.g. electric motors, transformers), are not allowed.
Connect point of measurement to gas inlet and outlet. See that connections are sealed!
Liquid entry into the ZR5 or into the measuring cell leads to heavy damage and to the complete destruction of the measuring cell.
Do not set up any objects filled with liquids on or in immediate proximity of the ZR5 – module!


ATTENTION

If the measuring gas contains a lot of steam and the possibility of formation of condensate exists, a water trap must be installed in front of the gas inlet.

The intrusion of water into the hot measuring cell destroys it. Therefore, it must absolutely be prevented.


ATTENTION

The measuring gas can also stream through the turned-off ZR5.

During the assembly of Swagelok connections for steel lines, the notes of the manufacturer given in chapter 9 have absolutely to be followed.

NOTE

If necessary, a needle valve (available from manufacturer) for pressure limitation has to be installed directly before gas inlet.

NOTE

Fuse: A resettable fuse is located on the PCB of the module (1.1 A).

4.4 Operation and setting

Operation and configuration are performed via the serial interface using the “Zirox Device User Software” included with the product. This software can be downloaded from the official Zirox website (www.zirox.de/en/download). An LED on the front of the device signalizes several working or alarm states (see 5.).

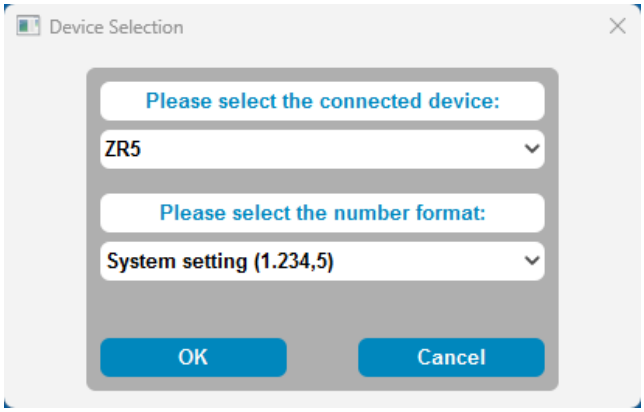

After launching the software, you must first select “ZR5” as the connected device. After confirming with “OK,” the main window opens. In the upper-left corner of that window, select the COM port to which the device is connected from the drop-down menu. Click “Open” to open the port.

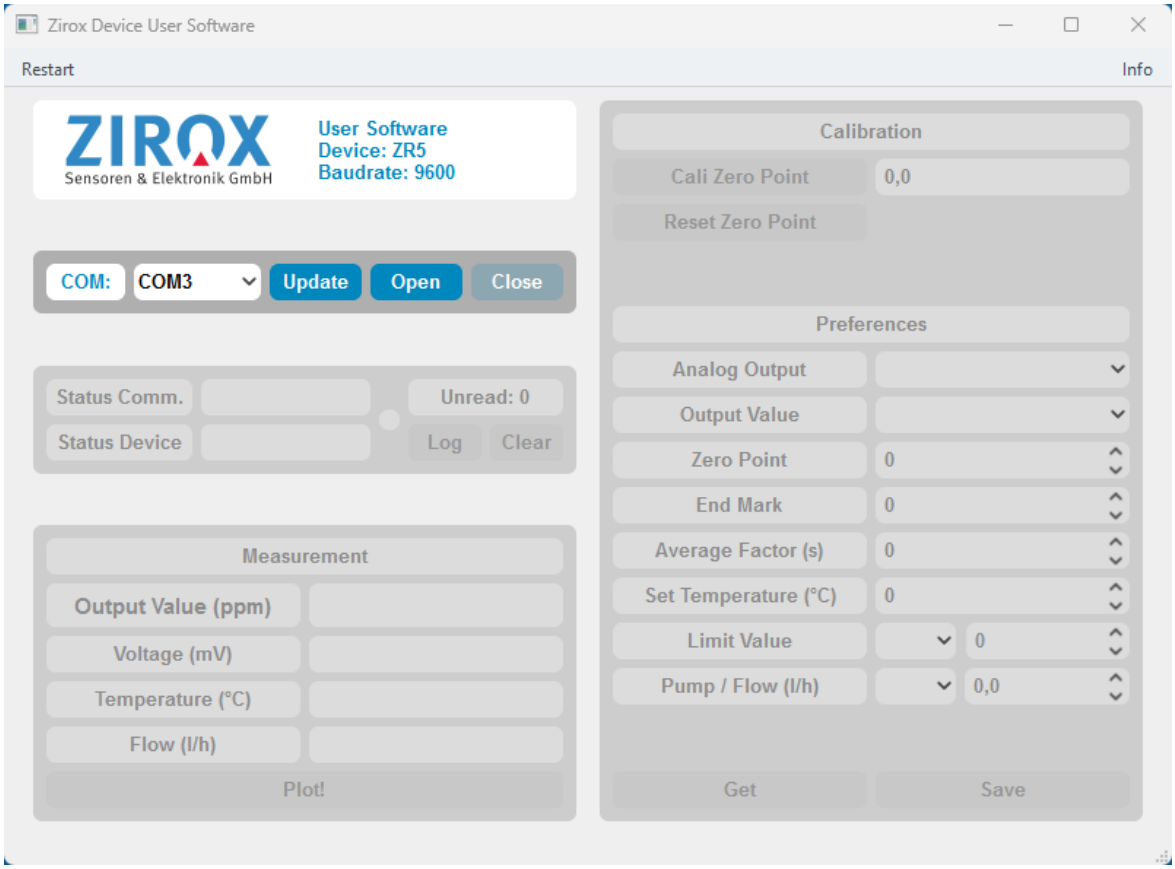

The “Measurement” section displays the currently measured values (once per second). The right-hand side is divided into the “Calibration” and “Preferences” sections. The values currently stored in the device can be retrieved using “Get.” Click “Save” to save the currently displayed values to the device.

The “Calibration” section displays the stored asymmetry voltage (zero point). The asymmetry voltage is caused by thermal effects (non-isothermal electrodes). This voltage can be adjusted by clicking the “Cali Zero Point” button. The device should be operated in clean ambient air for at least 10 minutes before performing the asymmetry calibration. Clicking “Reset Zero Point” resets the stored asymmetry voltage.

In the “Preferences” section, you can configure the measurement unit (linear ppm, logarithmic ppm, or cell voltage in mV) and the measurement range of the analog output signal (zero point and end mark). Furthermore, the average factor in seconds can be selected in this menu. The user also has the option to turn the built-in gas pump on and off, as well as to configure a limit value, which is indicated by the LED at the front of the device. The setpoint temperature and setpoint flow rate cannot be adjusted by the end user.

If the measured value is required in vol.%, use the following formula:

1 Vol.-% is 10^4 Vol.-ppm, 1 Vol.-ppm is 0.0001 Vol.-%.

NOTE



4.5 Data recording and processing

To record and process the measured values, you can open a new window by clicking “Plot.” Before starting the measurement, you can set the frequency at which the measured values are to be sampled in seconds (Sample Time). Recording is started by clicking “Start,” can be paused and resumed using “Pause” and “Resume,” and can be stopped by clicking “Stop.” When starting the measurement, you must select a save location for the recorded data. The data is saved in a .csv file using the number format selected when the program was launched (see image above). The recorded values are continuously displayed in the graph. You can select the value to be displayed using the menu in the lower-right corner. Regardless of this selection, all values are saved in the .csv file.



5 Fault clearance

Fault	Cause	Clearance
LED is off or red	No power supply or not enough operating voltage	Check power supply
	Open fuse	Wait for self-resetting If repeatedly tripping, contact service
Flow is much lower than 8 l/h	Gas supply blocked or flow resistance too high Pump off Pump or flow sensor defective	Check the gas supply, remove blockage, Switch on pump Contact service
Display „no data“ or „ERROR NO CONNECT“	No communication between computer and module False COM-port Serial cable defective Cable incorrectly plugged Serial interface defective	 Check COM-port Take another cable Check connections Contact service
Measuring value is much higher than expected	Leaks in the gas supply Flow too low Measuring cell broken (e.g. gas amount too high or condensate intrusion)	Check gas connections Pump off? Contact service
Measuring value is much lower than expected (LED is red if range is exceeded)	Components reacting with oxygen in measuring gas (e.g. hydrocarbons)	Lead measuring gas through a carbon filter, check carbon filter on saturation
Working temperature is not reached (LED is red)	Warm-up Heating defective Thermocouple defective	Wait 5 min Contact service Contact service

6 For interested RS232-users

For the command activation the setup O2MOD-2 must be started. The activation can also be started by command VVCR. The activation is ON until the power supply is disconnected.

After activation, the following parameters are available via interface:

Command	Feedback/example	Remark
VVCR	**VVCR**	Activation of internal commands
u1CR	**u xxx.xCR** **u 0.28**	Cell voltage in mV
u2CR	**u x.xxxCR** **u 749.9**	Thermal voltage in mV
u3CR	**u x.xCR** **u 7.0**	Flow in l/h
u5CR	**u x.xCR** **u -0.5**	Offset value Vasym in mV

The RS232 interface must be connected with a computer by SUB-D-cable (9pol., 1:1, uncrossed)!

If a wrong command is transferred (e.g. U1 instead of u1), ERROR0 will be displayed by software O2MOD-2!

7 Warranty conditions

ZIROX Sensoren & Elektronik GmbH warrants that the products manufactured and sold are free from manufacturing and material defects at the time of dispatch. In case of defects and faults within 12 months (probe) and 24 months (electronics assembly) respectively after dispatch, ZIROX will clear faults at its own option by repair or replacement. The purchaser must give prompt written notice to ZIROX. The purchaser is not entitled to claim other legal remedies based on this warranty.

ZIROX does not warrant supplied products, which are subject to normal wear and tear (e.g. reference gas pump).

Corrosive gases and solid particles may cause damage and require repair or replacement due to normal wear and tear.

The contact of the products with explosive gas compounds, halogens in high concentrations and sulphuric gases (e.g. SO_2) is not permitted.

The contact of the products with siliconic or phosphoric compounds is not permitted either.

A connection of ZIROX and non-ZIROX products voids any warranty claims.

Warranty and warranty claims are only accepted if they are in accordance with the "General Sales and Delivery Conditions" of the manufacturer.

Warranty and liability claims for damage to persons and/or property are void if they are subject to the following:

- Normal wear and tear
- Improper use of the product
- Disregard of the manual’s instructions
- Improper installation, initiation, operation and maintenance of the product
- Operation of the product without protective measures
- Unauthorized functional and technical modification of the product
- Dismantling of parts as well as installation of spare parts or additional units, which are not delivered or permitted by the manufacturer
- Improper repairs or faulty operation
- External impact
- Acts of God

Attention: When installing the equipment, the customer must ensure that all necessary supply lines are connected and the operating temperature of the probe is reached. Experience has shown that products installed but not in use may be damaged by the process or by external influence. ZIROX will not accept any responsibility for such damage.

8 Activated carbon filter: description and using instructions

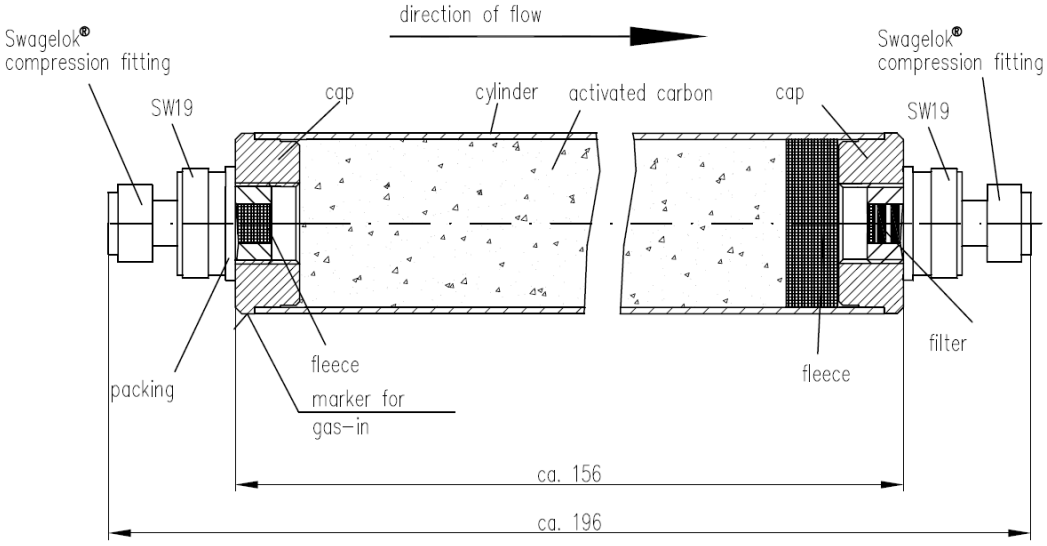

8.1 Filter construction

The figure above shows the carbon filter. Two caps close a tube containing carbon. Both caps are welded into the tube. The Swagelok fittings have stoppers to keep the carbon inside. The gas way is protected against carbon particles with a pre-filter and a fine filter in the outlet of the carbon filter.

8.2 Application and operation of the filter

Organic components of the test gas (e.g. alcohols) are adsorbed by the carbon. After longer usage, the cell voltage or the oxygen concentration can drop unexpectedly. This is a sign for saturation of the filter. The filter or the carbon filling must be changed.

8.3 Replacement

A saturated filter can be recycled by replacing the activated carbon filling only. For this purpose the carbon must be poured out after removing the Swagelok connection. Then new granulated carbon can be refilled into the container with a small funnel. The powder should be compressed by knocking a piece of wood against the filter housing. Finally, the removed Swagelok connection and the O-seal must be screwed onto the filter again.

Caution: Do not remove the closing stopper in the Swagelok fittings!

Weight	Approx. 285 g
Volume	Approx. 100 ml
Duration of use	Depending on the components and the concentration of the adsorbed organic components e.g. approx. 1…3 months at raw gas from a fermenting tank (ZKG)
Carbon used	Granulated or pelletized, 1…3mm

9 Mounting instructions for Swagelok®-fittings

Installation Instructions

Swagelok tube fittings 1 in. or 25 mm and Under

Swagelok tube fittings come to you completely assembled, finger-tight and are ready for immediate use. Disassembly before use is unnecessary and can result in dirt or foreign material getting into fitting and causing leaks.

Swagelok tube fittings are installed in three (3) easy steps:

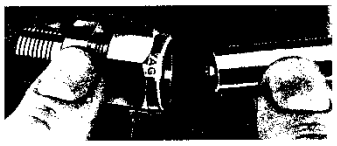

Step 1

Simply insert the tubing into the Swagelok tube fitting. ***Make sure that the tubing rests firmly on the shoulder of the fitting and that the nut is finger-tight.***

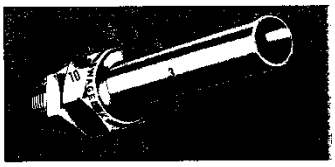

Step 2

Before tightening the Swagelok nut, scribe the nut at the 6 o'clock position.

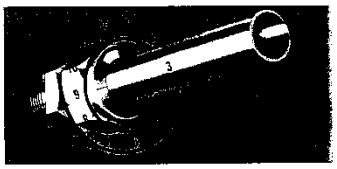

Step 3

Hold the fitting body steady with a backup wrench and tighten the nut 1 1/4 turns.① Watch the scribe mark, make one complete revolution and continue to the 9 o'clock position.

By scribing the nut at the 6 o'clock position as it appears to you, there will be no doubt as to the starting position. When the nut is tightened 1 1/4 turns to the 9 o'clock position, you can easily see that the fitting has been properly tightened.

Use of the gap inspection gage (1 1/4 turns from finger-tight) ensures sufficient pull-up.

High Pressure Applications or High-Safety-Factor Systems

Due to variations in tubing diameters, a common starting point is desirable. Using a wrench, tighten the nut to SNUG position. Snug is determined by tightening the nut until the tubing will not rotate freely (by hand) in the fitting. (If tube rotation is not possible, tighten the nut approximately 1/8 turn from the finger-tight position.) At this point, scribe the nut at the 6 o'clock position and tighten the nut 1 1/4 turns.① The fitting will now hold pressures well above the rated working pressure of the tubing.

Note: A Swagelok Hydraulic Swaging Unit must be used for assembly of Swagelok tube fittings onto 1 1/4, 1 1/2, 2 in., 28, 30, 32, and 38 mm outside diameter steel and stainless steel tubing (see page 55).

①For 1/16, 1/8, 3/16 in., 2, 3, and 4 mm size tube fittings, only 3/4 turn from finger-tight is necessary.

Retightening Instructions

Connections can be disconnected and retightened many times.
The same reliable leak-proof seal can be obtained every time the connection is remade.



1. Fitting shown in the disconnected position.



2. Insert tubing with preswaged ferrules into fitting body until front ferrule seats.



3. Tighten nut by hand. Rotate nut to the original position with a wrench. *An increase in resistance will be encountered at the original position.* Then tighten slightly with the wrench. Smaller tube sizes will take less tightening to reach the original position, while larger tube sizes will require more tightening. The wall thickness will also have an effect on tightening.

10 Declaration of conformity

EC Conformity Declaration

Document- Nr.: 19 **December 2007**

Manufacturer: **Zirox Sensoren & Elektronik GmbH**

Address: **Am Koppelberg 21**
D - 17489 Greifswald

Product designation: ***Sauerstoffmessmodul ZR5***

according the EC directive about the electromagnetic compatibility
2004/108/EG

We declare under our sole responsibility that this product is in conformity with the following standards or other normative documents:

harmonized standards:

Number:	Text:
EN 61000-6-2 Immunity	Electromagnetic compatibility (EMC) --Part 6-2: Generic standards - for industrial environments
DIN EN 61326 EMC	IElectrical equipment for measurement, control and laboratory use - requirements

This declaration certifies conformance with the above mentioned directives. Affirmation of attributes in a legal sense is not included. Safety declarations and installation instruction given in the product documentation have to be considered.

Manufacturer: **Zirox Sensoren & Elektronik GmbH**

Place, Date: Greifswald 8.1.2008

Signature: .....

ZIROX
Sensoren & Elektronik GmbH
Am Koppelberg 21
17489 Greifswald