ZIROX
Sensoren und Elektronik GmbH

# ZIROX – Gas Measuring Technology




## Hydrogen Sensor TCS

## Manual

**Power supply: 24 V DC**

**ZIROX Sensoren & Elektronik GmbH**
Am Koppelberg 21, D-17489 Greifswald, Germany
☎+49 3834 8309 -00, Fax: +49 3834 8309 -29
E-Mail: info@zirox.de

## Table of contents

1 General information ..... 5
2 Measuring principle ..... 7
2.1 Basics ..... 7
2.2 Special properties of the TCS ..... 7
3 Technical data ..... 8
3.1 General data ..... 8
3.2 Power supply and signal output ..... 9
3.3 Digital interface ..... 9
4 Mounting, initiation and operation ..... 11
4.1 General equipment configuration ..... 11
4.2 Mounting and initiation ..... 12
4.3 Operation and parametrization ..... 12
4.4 Calibration ..... 14
4.5 Data recording and processing ..... 15
4.6 Measurement accuracy ..... 15
5 Status messages and fault clearance ..... 16
5.1 Status messages LED ..... 16
5.2 Fault clearance ..... 16
6 Warranty conditions ..... 18
7 Assembly instructions for connection socket ..... 19

# 1 General information

The hydrogen sensor TCS (thermal conductivity sensor) serves the continuous measuring of the hydrogen concentration in industrial, lab and inert gases.

With the TCS

- the hydrogen concentration of a measuring gas is measured continuously and emitted via interface,
- deviations of the hydrogen concentration in the measuring gas from an adjustable set value are signalized,
- the running of certain production processes, which include hydrogen, is controlled.

**The use of the measuring cell in explosive rooms and the introduction of explosive gas mixtures is not permitted.**




**Liquids (condensate formation) cause the destruction of the TCS.**




**The introduction of halogens in high concentration and sulphuric gases (e.g. $SO_2$) into the TCS leads to a destruction of the sensor.**



# 2 Measuring principle

## 2.1 Basics

The **T**hermal **C**onductivity **S**ensor measures the hydrogen concentration.

In this case, the far higher thermal conductivity of hydrogen in contrast to other gases is utilized. The TCS produces a voltage linearly dependent on the hydrogen concentration (at best; actually, the characteristic line follows a complicated mathematical function established by complex calibrations).

Figure 1 shows the basic mode of operation. It is based on the temperature dependency of an electrically heated resistance wire on the thermal conductivity of the ambient gas.

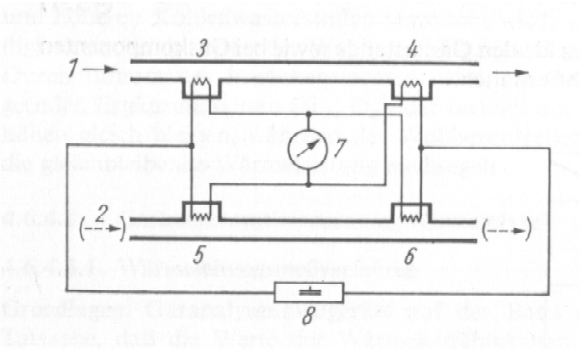


**Fig. 1**: *Basic drawing of the TCS*

The measuring gas (1) and the reference gas (2) flow around two measuring cuvettes connected as a Wheatstone bridge. In order to prevent direct gas flow influence on the wire temperature, a diffusion barrier is installed.

At concentration variations of the measuring gas the thermal conductivity and, with it, the electrical resistance of the measuring gas wire changes. The result is a change of the bridge voltage.

## 2.2 Special properties of the TCS

The TCS can also be used in low-pressure applications (e.g. surface treatment like case-hardening under vacuum conditions).

For this, a special software is needed. A complex calibration is conducted before dispatch. Additionally, the customer must know the **exact process pressure** (enter via set-up software).

**All calibrations must be conducted under the preset process pressure. In case of disregard, the characteristic line will be changed significantly.**




In case of low-pressure use, a special consultation with the manufacturer is recommended.

# 3 Technical data

## 3.1 General data

| | | |
|---|---|---|
| Measuring range | 0…100 vol% | |
| Measurement precision | < (± 5 % rel., ± 0,3 Vol.-% abs.) | |
| Response time | $t_{90}$ (sensor) < 90 s | Depends on flow and gas mixing in measuring chamber |
| Sensor temperature | 50 °C | Pre-thermostated, controlled electronically |
| Dimensions (WxHxD) | 80 mm x 125 mm x 83 mm | |
| Signal output | Analog output 0/4 - 20 mA (scaling via software) and serial interface RS232 | 0 – 5/10 V on request |
| Power supply | 24 VDC ± 20 %, approx. 20 VA | |
| Display | None, operation via software | |
| Protection degree | IP 65 | |
| Ambient temperature | 0…50 °C, 0…95 % rH | |
| Storage temperature | -20…60 °C, 0…95 % rH | |
| Gas connection | Via DIN40KF | Others on request |
| Gas supply | Via diffusion (Gas distribution at measuring chamber) | Suction mechanism on request |
| Ambient pressure | 950...1100 hPa (low-pressure application needs special calibration) | **Measuring value depends on pressure** |
| Warm-up | 10 min | |
| Calibration | First calibration (characteristic line determination) by manufacturer. Customer must do a 2-point-calibration approx. every 3 month | Process pressure must be known and provided to the manufacturer |
| Mounting | No requirements | |
| Cross sensitivity | Gases with high thermal conductivity falsify the measuring result | |

## 3.2 Power supply and signal output

Power supply and signal output are realized via 6pol. round pin plug (Figure 2). The socket is included in delivery.

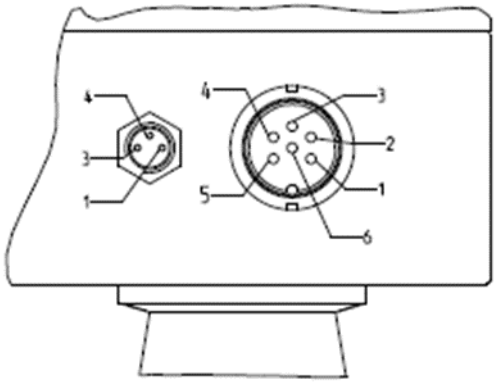


| Pin RS232 at SUB-D 9-pole | Conductor colouring | Designation |
|---|---|---|
| 2 | white | TxD |
| 3 | brown | RxD |
| 5 | green | GNDA |

| Pin | Conductor colouring | Plug assignment |
|---|---|---|
| 1 | pink | + 24 V |
| 2 | blue | GND |
| 3 | green | + Iout |
| 4 | yellow | - Iout |
| 5 | brown | Ready contact (potential-free) |
| 6 | white | |

***Fig. 2:*** *Plug assignment (Type 423 6pol., Fa. Binder, Best.-Nr.: 99-5622-15-06) and conductor colouring (if cable was provided)*

## 3.3 Digital interface

The digital output is an RS232 interface (9600 Baud). Via RS232, the regular two-point-calibration and the data transmission are realized.

The interface is located on the conductor board inside the housing. An adapter is included in delivery (Fig. 3).



***Fig. 3:*** *Adapter for RS232 interface*

**The RS232 must be connected with a PC by SUB-D-cable (9pol., 1:1, uncrossed)!**

Transmission rate: max. 9600 Baud, adjustable

| | | | |
|---|---|---|---|
| Stoppbits | 1 | Parity | none |
| Databits | 8 | Handshake | without |

## Protocol of the digital interface (CR = carriage return)

| Input | Response/ example | Transmitted measuring value | Parameter/remark |
|---|---|---|---|
| M2CR | M2x.xxExxCR<br>M22.06E+01 | 20,6 vol% $H_2$ | concentration |
| A1CR | A1xxx.xCR<br>A120.9 | 20,9 mV | sensor voltage in mV |
| A2CR | A2xx.xCR<br>A249.9 | 49,9 °C | measuring temperature in °C |

The adjustment of the parameters occurs via software (see chapter 4.3). Further software for display and storage of the measuring value is available (option).

## Error messages

| | |
|---|---|
| ERROR0 | Transmission error RS232 (or wrong or invalid command) |
| ERROR1 | Warm-up (sensor temperature too low and less than 30 min) |
| ERROR2 | Sensor temperature too low (< set temp. – 1.0 °C, longer than 30 min) |
| ERROR4 | Temperature measurement defective |
| ERROR6 | System error |

# 4 Mounting, initiation and operation

## 4.1 General equipment configuration

The hydrogen sensor was designed as a probe for real in-situ-measurements (no suction of the measuring gas). It is mounted via vacuum components (e.g. KF40). Figure 4 shows the dimensions.

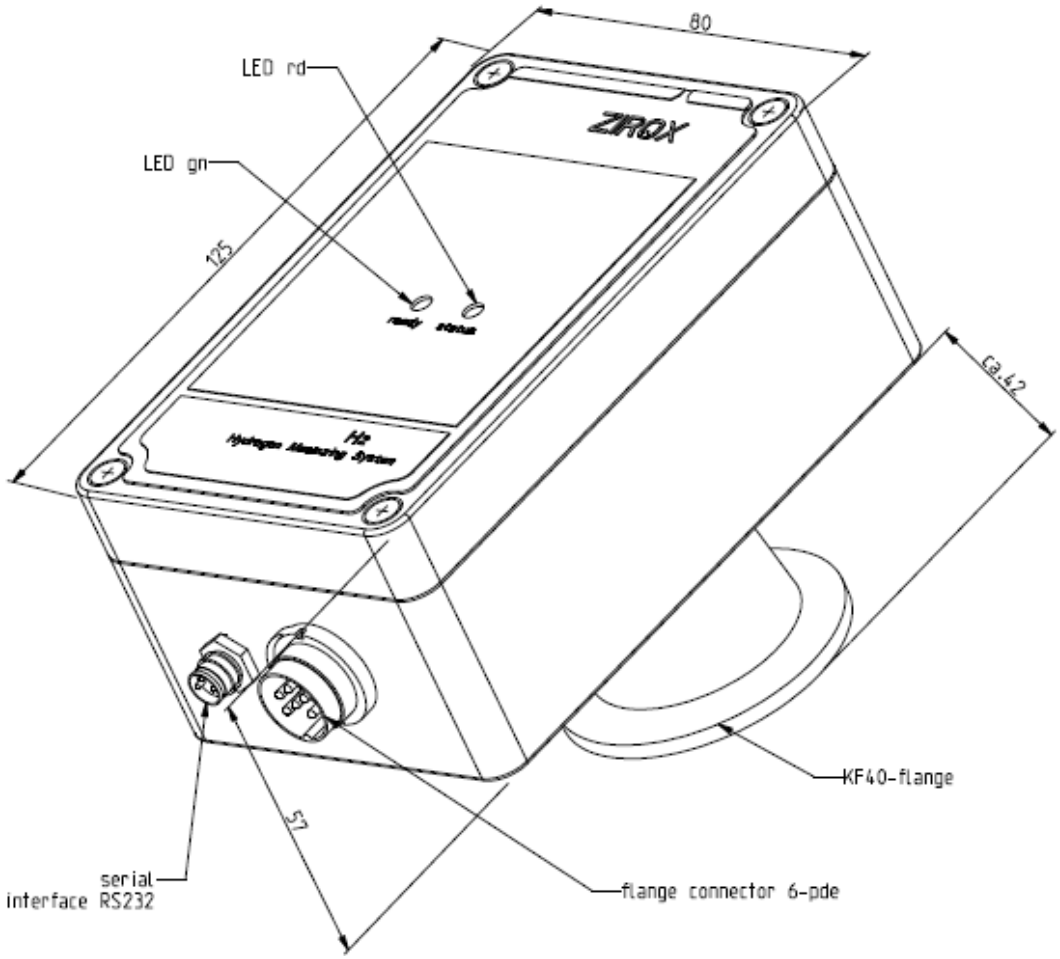


***Fig. 4:*** *TCS dimensions*

## 4.2 Mounting and initiation

NOTE

A temperature compensation is required after the transportation of the device from cold surroundings to a site with higher ambient temperature or humidity**.** Consider a **waiting time of about 2 hours** before switching-on.

Install the sensor with the provided vacuum components. The power supply is 24 V DC (connection via 6-pol. plug at housing, socket included in delivery, pin assignment see chapter 3.2)

Heat sources or pieces of equipment, which produce strong magnetic fields (e.g. electric motors, transformers), must not be in the immediate proximity of the place of installation.

## 4.3 Operation and parametrization

Operation and configuration are performed via the serial interface using the “Zirox Device User Software” included with the device. This software can be downloaded from the official Zirox website (www.zirox.de/en/download). Two LEDs on the sensor’s housing cover serve as operational indicators and signal specific operating or warning conditions (see Section 5.1).

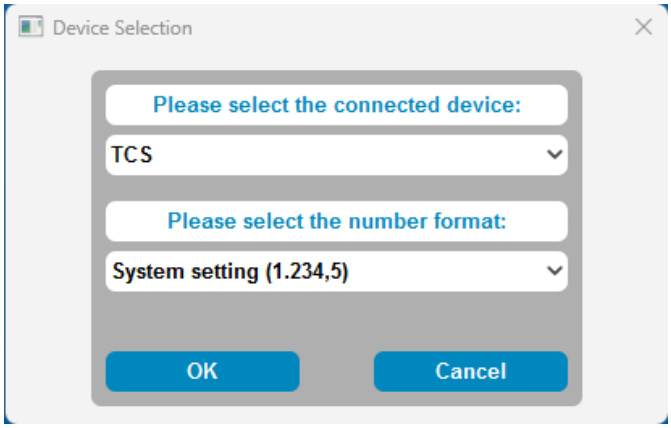


After launching the software, you must first select “TCS” as the connected device. After clicking “OK,” the main window opens. In the top-left corner of the window, select the COM port to which the device is connected from the drop-down menu. Click “Open” to open the port.

The “Measurement” section displays the currently measured values (once per second). The right side is divided into the “Calibration” and ‘Preferences’ sections. The values currently stored in the device can be retrieved using “Get.” Clicking “Save” saves the currently displayed values to the device.

In the “Preferences” section, you can configure the measurement value conversion (% linear or cell voltage in mV directly) and the measurement range of the analog output signal (Zero Point and End Mark). Furthermore, the delay factor in seconds can be selected in this menu. The user also has the option to configure a limit value for the limit relay (Limit Value). The setpoint temperature cannot be adjusted by the end user.

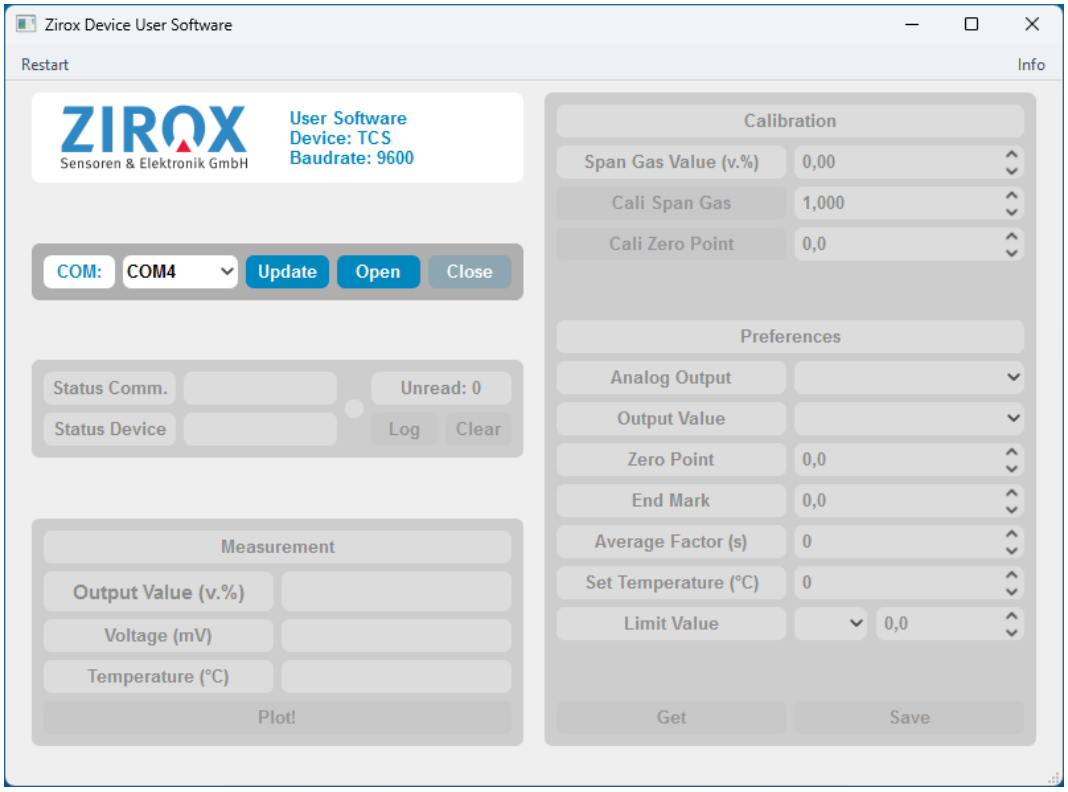




## 4.4 Calibration

**All calibrations must be conducted at the preset process pressure. In case of disregard, an extreme change of the characteristic line occurs.**




The user must perform a two-point calibration at regular intervals (at least every 3 months). This means performing an offset calibration in clean air and a span gas calibration with a test gas at a hydrogen concentration that, as far as possible, matches the concentration typically found in the process. To do this, the sensor is connected to a PC via the RS232 interface.

Calibration is performed using the “Zirox Device User Software” described in the previous chapter. Upon startup, select “TCS” again and open the appropriate COM port. The “Calibration” section is located in the upper-right corner.

Before calibration, the sensor should have been purged with the test gas for at least 15 minutes (clean air or test gas with a known $H_2$ concentration, e.g., 90/10 reforming gas). After sufficient purging with clean (hydrogen-free) air, click “Cali Zero Point”. Afterward, the measured $H_2$ concentration must be 0 v.%. For span gas calibration, first enter the test gas cylinder value in the “Span Gas Value (v.%)” field. After sufficiently purging the sensor with the test gas, perform the calibration by clicking “Cali Span Gas.”

The end user cannot directly set the zero point and span gas calibration values. However, if an error occurred during calibration and it is necessary to reset the values to their factory defaults, please contact the manufacturer.

If this calibration is not performed, the sensor will still be operational, but the measured values will no longer fall within the error limits specified in this manual (see Chapter 4.6).

## 4.5 Data recording and processing

To record and process the measured values, you can open a new window by clicking “Plot.” Before starting the measurement, you can set the frequency at which the measured values are to be sampled in seconds (Sample Time). Recording is started by clicking “Start,” can be paused and resumed using “Pause” and “Resume,” and can be stopped by clicking “Stop.” When starting the measurement, you must select a save location for the recorded data. The data is saved in a .csv file using the number format selected when the program was launched (see images above). The recorded values are continuously displayed in the graph. You can select the value to be displayed using the menu in the lower-right corner. Regardless of this selection, all values are saved in the .csv file.

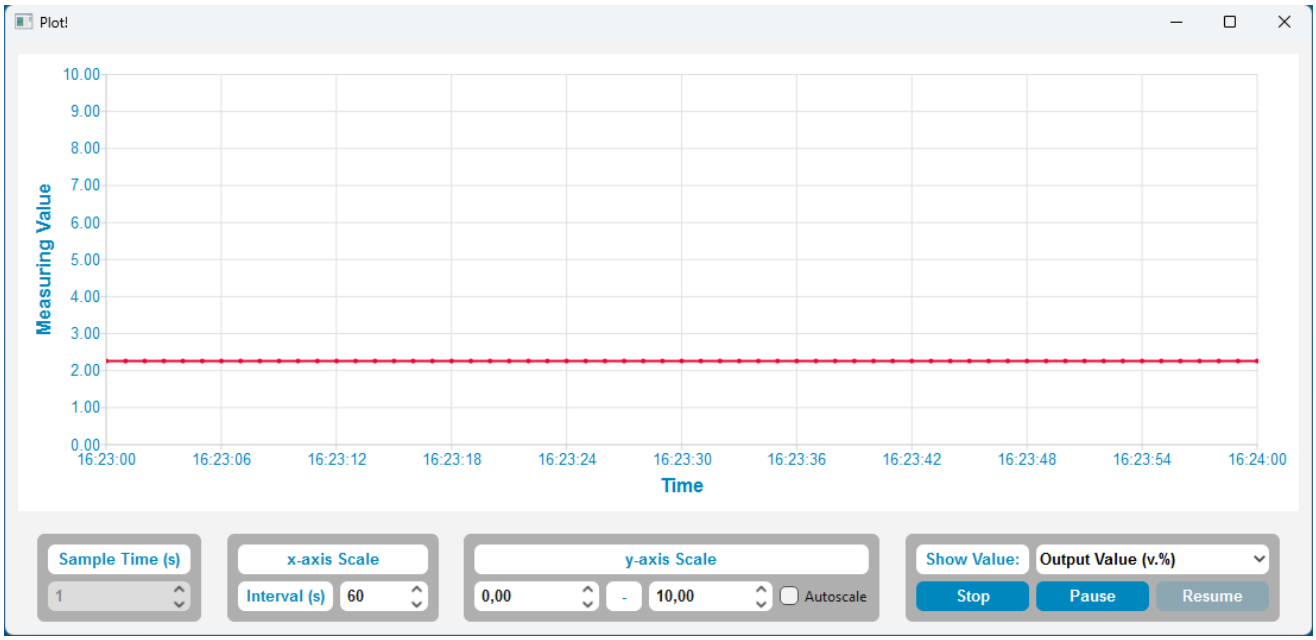


## 4.6 Measurement accuracy

The manufacturer guarantees a measurement error of less than ± 5 % relative to the displayed measured value plus additional ± 0.3 vol.% absolute.

In measurements of hydrogen, concentrations of < 1 vol% a relative error of < 5% can only be reached if the following aspects are considered:

- Good mixing of the measuring gas under normal pressure conditions.
- Tight gas supply (special construction without vacuum components).
- If the measuring gas contains other components with high thermal conductivity besides hydrogen, these parts must be considered in the error analysis.
- All calibrations must be conducted at the preset process pressure.

# 5 Status messages and fault clearance

## 5.1 Status messages LED

| Nr. | Description | LED red | LED green |
|---|---|---|---|
| 1 | OK | off | on |
| 2 | Sensor temperature < 50 °C (set temp.) | flashing | off |
| 3 | Temperature measurement defective | | |
| 4 | System error | | |
| 5 | Limit value exceeded | on | on |

**In status 2 to 4 the current output goes to 0 mA!**

## 5.2 Fault clearance

| Fault | Cause | Clearance |
|---|---|---|
| No output signal | Power supply off | Check power supply, check pin assignment of the socket |
| | Sensor temperature too low | Check power supply |
| | System error | Consult service |
| Higher measuring value than expected | System contains additional gas compounds with high thermal conductivity coefficient | Contact service, check the general suitability of the system for the measuring task |
| Measuring value is considerably lower than expected | Leaks | Check sealings |

**Fuse:** The sensor electronics has a resettable fuse (1.1 A).

# 6 Warranty conditions

ZIROX Sensoren & Elektronik GmbH warrants that the products manufactured and sold are free from manufacturing and material defects at the time of dispatch. In case of defects and faults within 12 months (probe) and 24 months (electronics assembly) respectively after dispatch, ZIROX will clear faults at its own option by repair or replacement. The purchaser must give prompt written notice to ZIROX. The purchaser is not entitled to claim other legal remedies based on this warranty.

ZIROX does not warrant supplied products which are subject to normal wear and tear (e.g. reference gas pump).

Corrosive gases and solid particles may cause damage and require repair or replacement due to normal wear and tear.

The contact of the products with explosive gas compounds, halogens in high concentrations and sulphuric gases (e.g. $SO_2$) is not permitted.

The contact of the products with siliconic or phosphoric compounds is not permitted either.

A connection of ZIROX and non-ZIROX products voids any warranty claims.

Warranty and warranty claims are only accepted if they are in accordance with the "General Sales and Delivery Conditions" of the manufacturer.

Warranty and liability claims for damage to persons and/or property are void if they are subject to the following:

- Normal wear and tear
- Improper use of the product
- Disregard of the manual’s instructions
- Improper installation, initiation, operation and maintenance of the product
- Operation of the product without protective measures
- Unauthorized functional and technical modification of the product
- Dismantling of parts as well as installation of spare parts or additional units which are not delivered or permitted by the manufacturer
- Improper repairs or faulty operation
- External impact
- Acts of God

**Attention:** When installing the equipment, the customer must ensure that all necessary supply lines are connected and the operating temperature of the probe is reached. Experience has shown that products installed but not in use may be damaged by the process or by external influence. ZIROX will not accept any responsibility for such damage.

# 7 Assembly instructions for connection socket

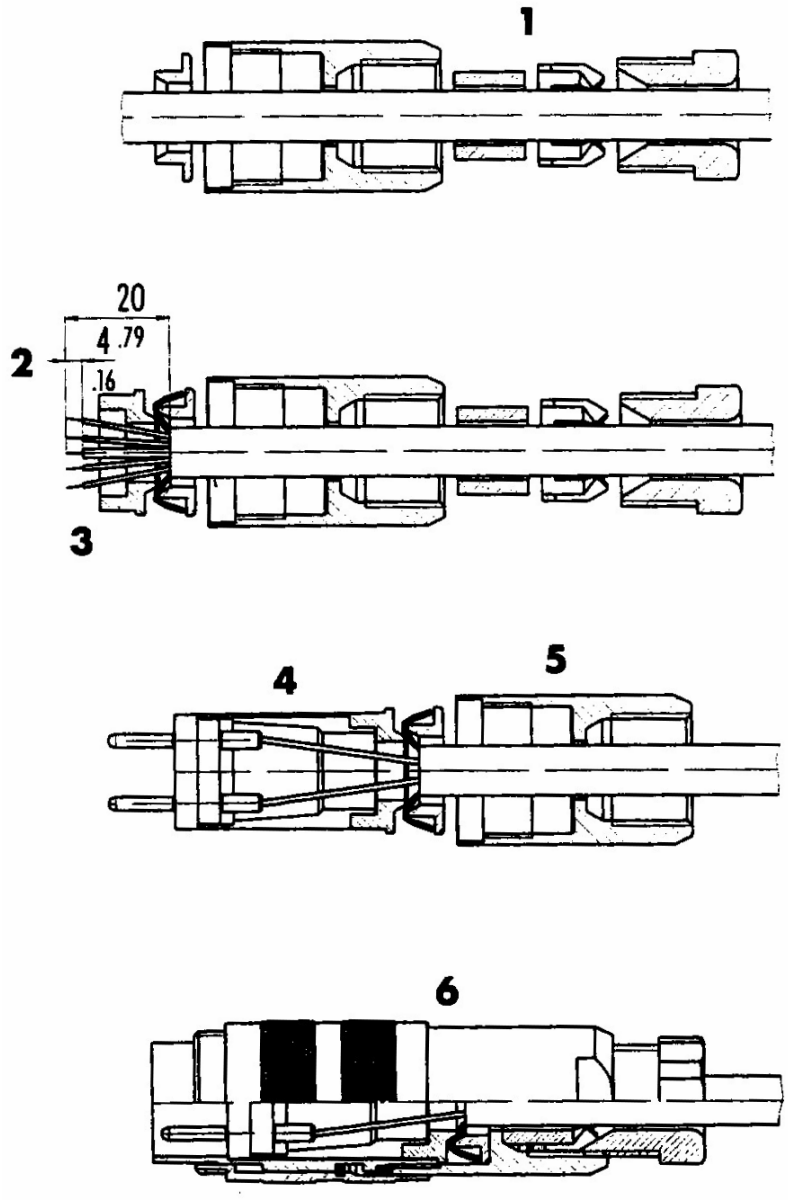


1. Thread parts
2. Strip the insulation and widen shield
3. Assemble shield clamping ring
4. Solder wire, attach distance bush
5. Cut off lapping shield
6. Assemble remaining parts according to plan