ZIROX
Sensoren und Elektronik GmbH

SWM1000



Measuring device for the determination of oxygen and hydrogen concentrations in process gases

Manual

ZIROX Sensoren & Elektronik GmbH

Am Koppelberg 21, 17489 Greifswald/Germany ☎+49 3834 830900, E-Mail: info@zirox.de

Inhalt

1 General information 5
1.1 Notes on the manual 5
1.2 Copyright 5
1.3 Commonly used symbols 6
2 Safety regulations 7
3 Measuring principles 8
3.1 Hydrogen 8
3.2 Oxygen 9
4 Technical data 11
4.1 General data 11
4.2 Device structure, power supply and signal outputs 13
4.3 Analog outputs 14
4.4 Digital interfaces 14
5 Initiation and operation 16
5.1 Basic circuit diagram 16
5.2 Gas connection and flow rate 17
5.3 Installation and initiation 17
5.4 Operation, parameterization and calibration 19
5.5 Calibration 21
5.6 Data collection and further processing 22
5.7 Accuracy of measurement 23
6 Fault clearance 24
7 Warranty conditions 26
8 Mounting instructions for Fitok®-fittings 27
9 Declaration of conformity 28

1 General information

1.1 Notes on the manual

This manual describes composition, mode of operation and use of the oxygen monitor SWM1000 of ZIROX Sensoren und Elektronik GmbH.

Address of manufacturer:

ZIROX Sensoren und Elektronik GmbH
Am Koppelberg 21
17489 Greifswald
Germany
Phone: +49 38 34 830900
E-Mail: info@zirox.de
www.zirox.de

This manual is not subject to the amendment service. If the manufacturer modifies the device with the aim of making technical improvements, the user is responsible for inserting the additional or updated pages supplied.

Proper operation of the device can only be ensured if the contents of this manual are known. Therefore, all chapters of this manual must be read carefully before commissioning the appliance.

Pages, charts and figures are numbered consecutively.

The values shown in the display in this device manual are examples or the values preset by the manufacturer. The process-specific values must be determined by the user.

1.2 Copyright

This operation manual is copyright protected.

It must not be partially or completely reproduced, copied, or distributed, without prior written permission of the manufacturer. The use for competitive advantages or the distribution to third parties are not authorized either.

All rights reserved.

1.3 Commonly used symbols

Symbol for imminent danger:



You will find this symbol next to all instructions on occupational safety if there is an immediate danger to the life and health of persons.

Failure to follow these instructions may result in serious injury or death.

Symbol for indirect danger:



This symbol indicates situations in which indirect hazards occur. The degree and intensity of the damage depend on the sequence of events triggered and the actions of the person concerned.

In case of disregard, destruction or damage of the device, its single components or other material assets as well as minor injuries may result.

Symbol for proper handling:

NOTE

This symbol is used in places in this appliance manual where reference is made to compliance with guidelines, regulations and correct work procedures.

In case of disregard, damage or destruction of the device or its single components may result.

2 Safety regulations

Designated use

The SWM1000 is used to continuously measure the oxygen and hydrogen concentration in gas mixtures.

The following regulations for industrial safety provide basic information about potential danger during the operation of the measuring device. Therefore, they must be observed and strictly followed by the responsible staff.

- A failure-free and functional operating of the device can only be guaranteed with knowledge of this manual. Therefore, all chapters of this manual must be read carefully before the installation and initiation of the device.
- The device may only be used for its intended purpose.
- The device may only be connected, operated and maintained by trained personnel.



The introduction of halogens in high concentration and sulphurous gases (e.g. SO_2) into the device leads to a destruction of the sensors. Furthermore, the electrodes of the oxygen sensor can be damaged irreversibly by typical catalyst poisons (e.g. Pb compounds).



The use of the device in explosive rooms or the use of explosive gas mixtures is not permitted.



The introduction of liquids into the device or the entrainment of condensate droplets with the measuring gas flow will destroy the measuring cells. If there is a risk of condensation, a condensate trap must be installed upstream.

NOTE

The requirements and limit values given in the "Technical Data" must be strictly observed. Any other use is treated as non-authorized use.

Special safety recommendations for potential danger during certain working processes are given in relevant text passages.

3 Measuring principles

3.1 Hydrogen

The hydrogen concentration is measured by a Thermal Conductivity Sensor (TCS). This utilizes the significantly higher thermal conductivity of hydrogen compared to all other gases. The TCS generates a voltage that depends on the hydrogen concentration in the sample gas. The corresponding characteristic curve is based on a mathematical function, which is determined by a calibration.

Figure 1 shows the basic mode of operation. It is based on the dependence of the temperature of an electrically heated resistance wire on the thermal conductivity and thus on the composition of the surrounding gas.

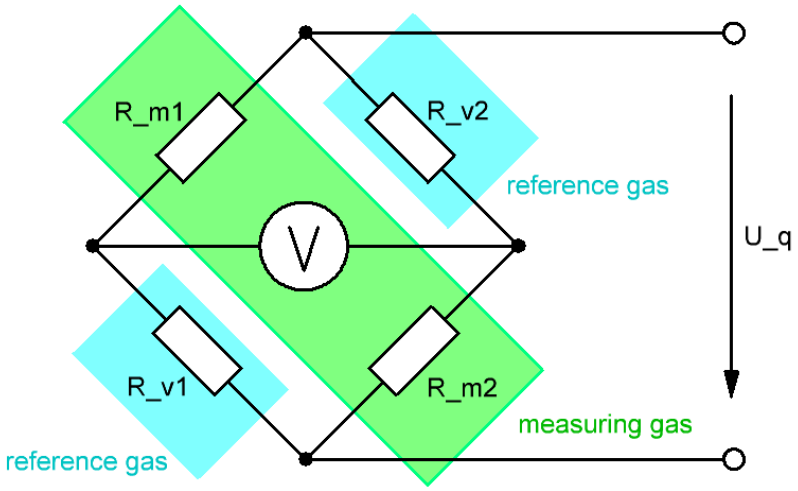

Figure 1: Basic structure of the TCS

Two heated sensor elements (resistors) located opposite each other in a Wheatstone bridge are in the sample gas (green). The other two are surrounded by a reference gas (usually air, blue). To prevent influences on the temperature of the sensor elements due to gas flow, the sample gas enters the measuring chamber by diffusion (green). If the concentration of the sample gas fluctuates, its thermal conductivity changes. This changes the temperature and therefore also the electrical resistance value of the two sensor elements in the sample gas. This leads to a change in the bridge output voltage.

As the thermal conductivity of the sample gas depends on the pressure, the measured value is in principle also pressure-dependent. Even if the thermal conductivity of hydrogen is considerably higher than that of all other gases, any change in the gas composition (i.e. also a change in the concentration ratios of the other gas components) will in principle affect the measurement result. The sensor is usually calibrated for measuring the hydrogen concentration in pure nitrogen (carrier gas) before delivery. A zero point and range calibration can be carried out by the user (see section 5.5).

3.2 Oxygen

Basics

The oxygen concentration is measured using a potentiometric solid electrolyte cell. Basis for the determination of the oxygen concentration in gases is the NERNST equation:

Nernst equation

$$U = \frac{RT}{4F} \cdot \ln \frac{p_{O_2,\,\text{meas gas}}}{p_{O_2,\,\text{air}}} \qquad \text{(I)}$$

U – Cell voltage in mV

R – molar gas constant, R = 8.31 J/(mol · K)

F – Faraday-constant, F = 9.64 · 10^4 C/mol

T – measuring temperature in K

$p_{O_2,\,\text{air}}$ – partial pressure of the oxygen at the reference electrode in Pa

$p_{O_2,\,\text{meas gas}}$ – partial pressure of the oxygen at the measuring electrode in Pa

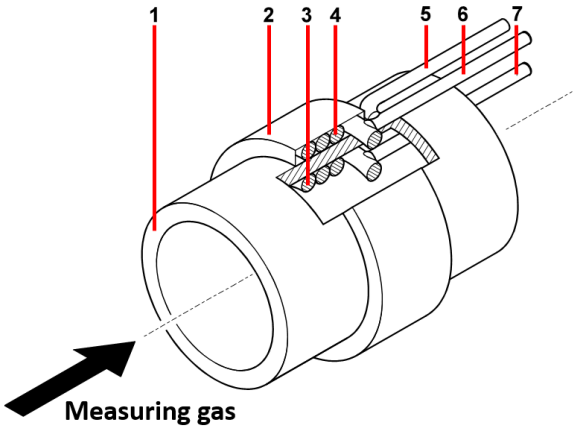

1	Solid electrolyte tube
2	Ceramic coverage of the measuring electrode
3	Measuring electrode
4	Reference electrode
5	Thermocouple
6	Connection wire of the reference electrode
7	Connection wire of the measuring electrode

Figure 2: Construction of the solid electrolyte measuring cell

The measuring cell (sensor) consists of a tube made of zirconium dioxide (1) with two platinum electrode wires. Inside the tube, through which the sample gas flows, there is a measuring electrode (3). The reference electrode (4) is located at the outer side of the tube and has a constant electrode potential. It is located in ambient air. The electrodes and the ceramic tube form a galvanic solid electrolyte-measuring cell.

To gain a higher oxide ion conductivity of the zirconium dioxide tube the sensor is heated up to 750 °C. This also avoids interfering reactions at the electrode with combustible components of the measuring gas due to chemical non-equilibrium. A thermocouple (5) inside the measuring cell delivers the actual sensor temperature (the second thermo-couple leg is formed by the electrode lead (6)). A heater control ensures a constant temperature.

Based on the assumption that the total pressures of the gases are almost the same at both electrodes (in this case, the volume concentrations may be used in the calculation instead of the partial pressures) and replacing the parameters by numbers in equation (I), the following equation is valid:

$$\varphi_{O_2} = 20.64\ \text{vol.\%} \cdot e^{\left(-46.42\ \frac{\text{K}}{\text{mV}} \cdot \frac{U}{T}\right)} \qquad \text{(II)}$$

φ_{O_2} – Oxygen concentration in the sample gas in vol.%

U – Cell voltage in mV (Note the sign. Insert positive voltage for $\varphi_{O_2} < 20.64\ \text{vol.\%}$)

T – Measuring temperature in K

$20.64\ \text{vol.\%}$ – O_2-concentration in air with a relative humidity of 50 %

Presence of reducing gases (e.g. hydrogen)

If reducing gas components are present in the gas mixture (e.g. hydrogen), this gas reacts with the oxygen at the measuring electrode (high temperatures). This is an equilibrium reaction.

The determination equation **(II)** applies in any case. If there is excess oxygen or reducing gas components are not present, the oxygen concentration of the free oxygen that has not reacted is calculated. If there is an excess of reducing gas components, the chemical equilibrium at the measuring electrode shifts. The concentration of the remaining "equilibrium oxygen" is calculated from equation **(II)**. The concentration of this equilibrium oxygen is determined by the law of mass action of the reaction and often assumes extremely small values.

4 Technical data

4.1 General data

Power supply	24 VDC ± 10 %, approx. 40 W	
Signal output	Two analog outputs 0/4…20mA (scaling by software) and serial interface RS232	Load max. 500 Ω, do not apply any (auxiliary) voltage to the current outputs!
Display	None, operation via software	
Dimensions (BxHxD)	204 mm x 154 mm x 119 mm	
Mass	Approx. 2 kg	
Protection Degree	IP 20	
Mounting	No requirements	
Gas connections	Inlet: 6mm compression fitting Outlet: 6mm compression fitting	
Gas supply	No internal pump, a constant flow rate of 5 l/h - 12 l/h must be ensured	Device must be protected against excessive overpressure, e.g. by needle valve, for pressure >3 bar, an additional pressure reducer is necessary
Ambient conditions	0…50 °C, 0…95 % rH	
Storage conditions	-20…60 °C, 0…95 % rH	
Ambient pressure	950...1100 hPa	Measured values are pressure-dependent!
Max. sample gas pressure	20 mbar overpressure	Measured values are pressure-dependent!
Permissible sample gas temperature	0 to 50 °C at gas inlet	
Warm-up	< 10 min	

Hydrogen sensor

Measuring range	0…100 vol.% H_2	
Measurement precision	< (± 5 % rel. ± 0.3 vol.% abs.)	
Response time	t_{90} (of sensor) < 90 s	Depends on the gas flow and supply line length
Sensor temperature	50 °C	Controlled electronically
Calibration	Initial calibration (characteristic curve determination) by manufacturer, customer must carry out a zero-point-calibration once a year (see sec. 5.5)	Process pressure must be specified in advance Initial calibration usually for hydrogen in nitrogen Zero point and range calibration possible by user
Cross sensitivity	Sensor reacts to any change in the thermal conductivity of the sample gas	See sec. 3.1

Oxygen sensor

Measuring range	20.6 vol.%...1 vol.ppm O_2	Optional from 100 vol.% and up to 10^{-20} vol.ppm
Measurement precision	< (± 5 % rel. ± 1 vol.ppm abs.)	
Response time	t_{90} (of sensor) approx. 10 s	Depends on the gas flow and supply line length
Sensor temperature	750 °C	Controlled electronically
Calibration	Calibration-free, zero-point adjustment (asymmetry adjustment) by user in ambient air	
Cross sensitivity	None, but reducing gas components react with oxygen	See sec. 3.2

4.2 Device structure, power supply and signal outputs

The basic structure of the device, the dimensions and the pin assignments can be seen in Figure 3.

Counterpart (socket) for 6-pin plug:
423 6pol. (Binder), order No.: 99-5622-15-06

Counterpart (socket) for 4-pin plug:
Socket header 4pol. (Weco), order No.: 10.808.104

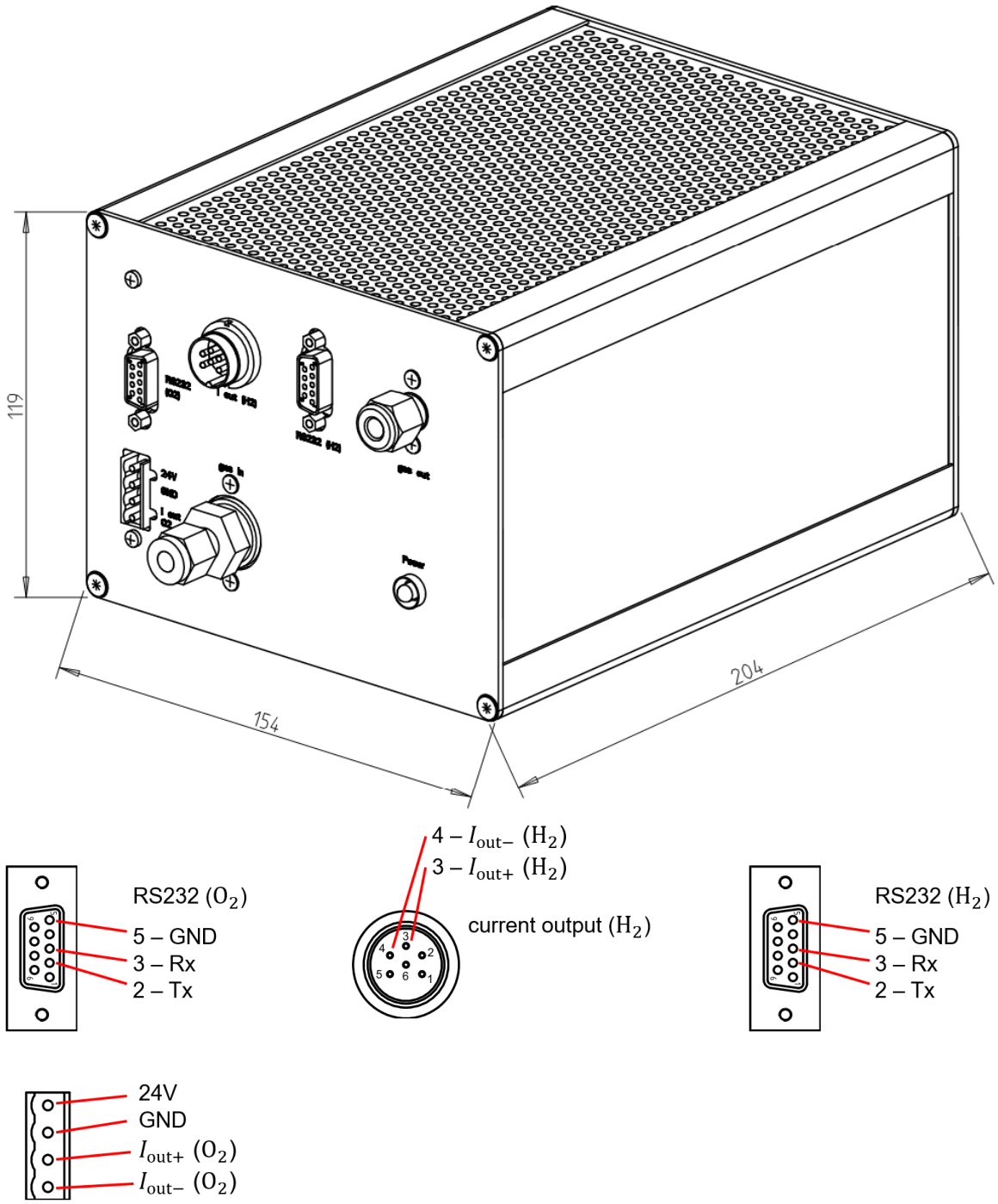

Figure 3: Device structure and pin assignment

4.3 Analog outputs

The signals from the sensors are each issued via an analog output (0/4...20mA, isolated). The pin assignment can be found in Figure 3 (section 4.2). Configuration is carried out using the digital interface and the software supplied (see sec. 5.4). The load applied to the analog output must not exceed 500 Ω.

ATTENTION

No voltage may be applied to the analog outputs! This can lead to the destruction of the device!

4.4 Digital interfaces

The device has two digital interfaces (RS232), each for one of the sensors. These are used to set the operating parameters using software (see sec. 5.4). The measured values can also be issued digitally. The pin assignment can be seen in Figure 3.

NOTE

The RS232 interface must be connected to a computer via SUB-D connection cable (9-pin, 1:1, not crossed).

Hydrogen sensor

Transmission rate: max. 9600 Baud, adjustable, standard: 9600 Baud

Stop bits	1	Parity	None
Data bits	8	Handshake	Without

Protocol of the digital interface (CR = carriage return):

Input	Response/ example	Transmitted measuring value	Parameter/remark
M2CR	M2x.xxExxCR M22.06E+01	20.6 vol.% H_2	Concentration
A1CR	A1xxx.xCR A120.9	20.9 mV	Sensor voltage in mV
A2CR	A2xx.xCR A249.9	49.9 °C	Measuring temperature in °C

Error messages:

ERROR0	Transmission error RS232 (or incorrect or invalid command)
ERROR1	Warm-up (sensor temperature too low and shorter than 30 min)
ERROR2	Cell temperature too low (< set temp. – 1.0 °C, longer than 30 min)
ERROR4	Temperature measurement defective
ERROR6	System error

Oxygen sensor

Transmission rate: max. 9600 Baud, adjustable, standard: 9600 Baud

Stop bits	1	Parity	None
Data bits	8	Handshake	With-out

Protocol of the digital interface (CR = carriage return):

Set	Feedback signal/ example	Transferred measuring value	Parameter
M2CR	M2x.xxExxCR M22.06E+05	$2.06*10^5$ ppm O_2	Oxygen concentration in ppm
A1CR	A1xxx.xCR A120.9	20.9 mV	Cell voltage in mV
A2CR	A2xxx.xCR A2749.9	749.9 °C	Measuring temperature in °C

Error messages:

ERROR0	Transfer error RS232 (or incorrect command)
ERROR1	Warm-up (cell temperature too low and shorter than 30 min)
ERROR2	Cell temperature too low (< set temp. – 10 °C, longer than 30 min)
ERROR3	Thermocouple broken
ERROR6	System error

5 Initiation and operation

5.1 Basic circuit diagram

A technical gas circuit diagram is shown in Figure 4. The device is equipped with a flame arrester (WITT F53N).

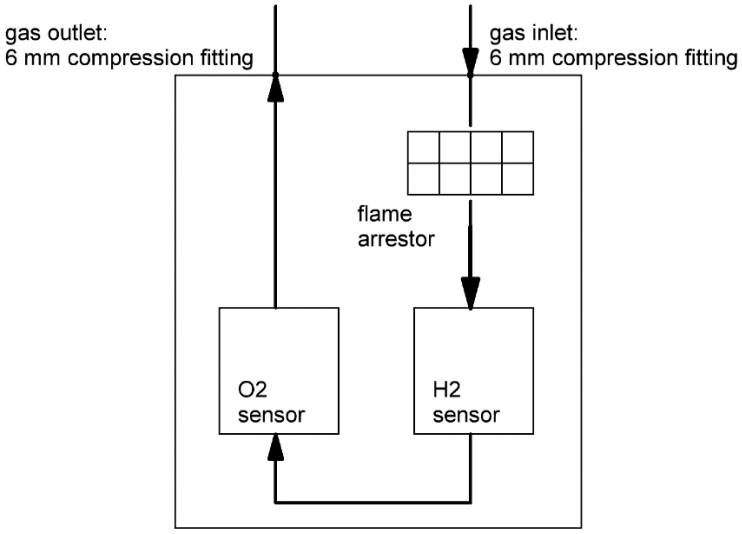

Figure 4: Basic gas circuit diagram

5.2 Gas connection and flow rate

The gas in- and outlet is at the rear of the module (see Figure 5). Please note that for measurements under 100 vol.ppm O_2 stainless steel tubes are necessary in order to minimize measuring errors (see sec. 5.7).



Figure 5: Rear of the SWM1000

NOTE

To ensure accurate measurement, a constant flow rate of the sample gas between 5 and 12 l/h must be maintained.

If the flow rate is too low, contamination effects from the gas lines (leaks, permeabilities, desorption) will have an incorrect effect on the measurement result. If the flow rate is too high, asymmetrical cooling of the sensors can cause measurement errors.

5.3 Installation and initiation

NOTE

The following instructions must be observed when installing and commissioning the device:

- When transporting the device from a cold environment to a location with a higher ambient temperature or humidity, allow a waiting time of at least two hours for the temperature to equalize before switching on the device.
- The device must be set up in a dry and largely dust-free room on a stable, level surface and connected to the 24 V DC supply voltage (4-pin plug on the back of the device).
- There must be no heat sources or devices that generate strong magnetic fields (e.g. electric motors, transformers) in the vicinity of the installation site.
- Pipe connections must be made from the measuring point to the gas inlet and outlet. Ensure that the pipe connections are tight.

ATTENTION

Liquid entry into the device can lead to heavy damage and to the complete destruction of the device.

If the sample gas contains so much water vapor that there is a risk of water condensing in a cold connection line, a water separator must be installed before the sample gas enters the device. This must be made of non-permeable materials for measurements at low gas concentrations.

NOTE

The measuring gas can also stream through the turned-off device.

If necessary, a needle valve (available from manufacturer) for pressure limitation has to be installed directly before gas inlet.

Fuse: The electronics of the device are protected by automatically resetting fuses (1.85 A in total).

5.4 Operation, parameterization and calibration

Operation and configuration are performed via the serial interface using the “Zirox Device User Software” included with the product. This software can be downloaded from the official Zirox website (www.zirox.de/en/download).

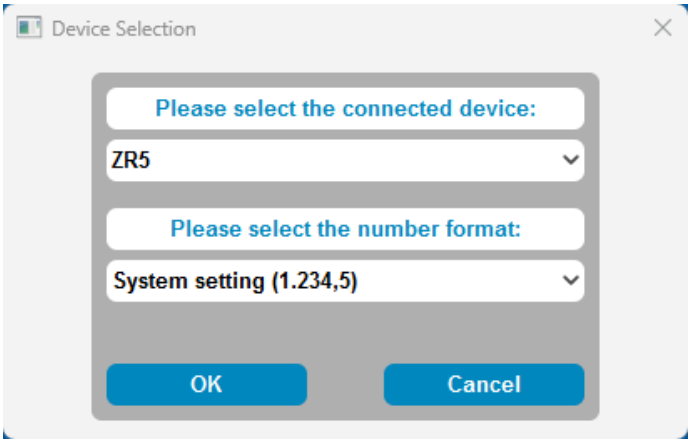

Figure 6: Device selection

After launching the software, you must first select “TCS” (hydrogen sensor) or “ZR5” (oxygen sensor) as the connected device. The PC should be connected to the appropriate RS232 interface on the SWM1000. After clicking “OK,” the main window opens. In the top-left corner of the window, select the COM port to which the device is connected from the drop-down menu. Click “Open” to open the port.

The “Measurement” section displays the currently measured values (once per second). The right side is divided into the “Calibration” and ‘Preferences’ sections. The values currently stored in the device can be retrieved using “Get.” Clicking “Save” saves the currently displayed values to the device.

Hydrogen sensor

In the “Preferences” section, you can configure the measurement value conversion (% linear or cell voltage in mV direct) and the measurement range of the analog output signal (zero point and end mark). Furthermore, the delay factor in seconds can be selected in this menu. With the SWM1000, the user cannot configure a limit value relay. This setting can therefore be ignored. The setpoint temperature cannot be adjusted by the end user.

Oxygen sensor

In the “Preferences” section, you can configure the measurement value conversation (linear ppm, logarithmic ppm, or cell voltage in mV) and the measurement range of the analog output signal (zero point and end mark). Furthermore, the delay factor in seconds can be selected in this menu. Since the SWM1000 does not have a built-in sample gas pump, the “Pump / Flow (l/h)” setting can be ignored. Since there is also no built-in flow sensor, the “Flow (l/h)” reading will never display a value. Exceeding or falling below the configurable limit value is indicated by the LED on the back of the device. A limit value relay cannot be configured on the SWM1000. The setpoint temperature cannot be adjusted by the end user.



Figure 7: User software hydrogen sensor

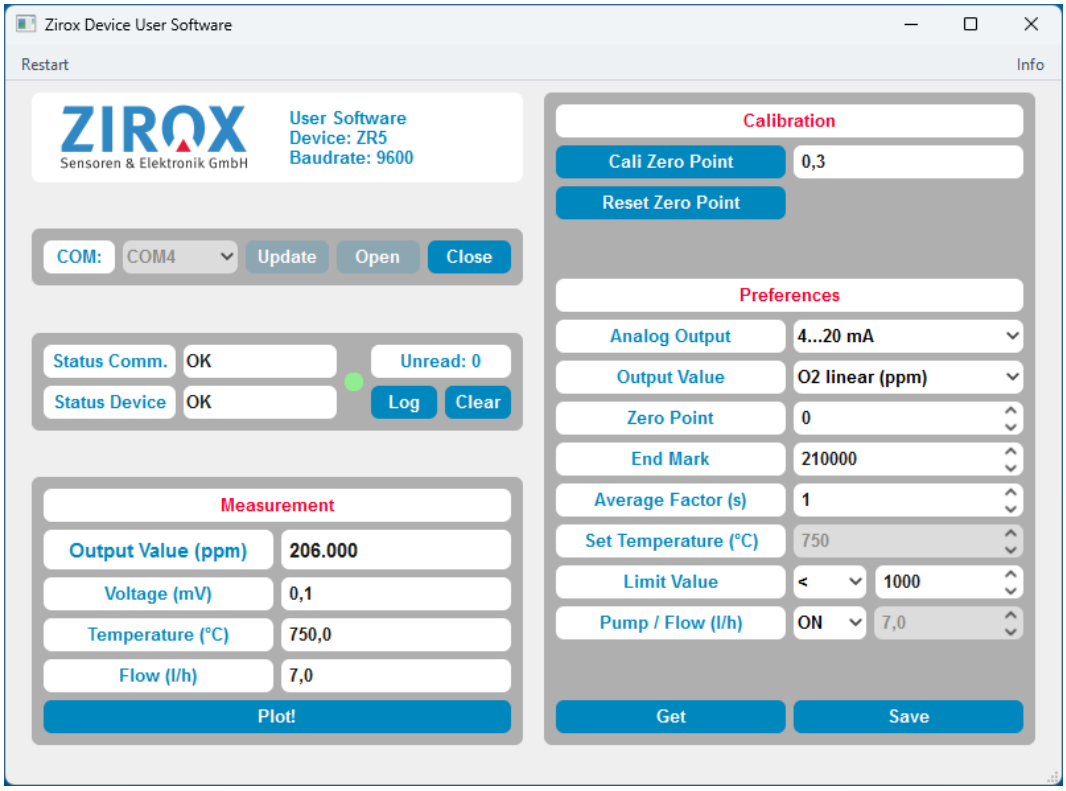

Figure 8: User software oxygen sensor

5.5 Calibration

Both sensors are calibrated using the “Zirox Device User Software” described in the previous chapter. Upon startup, select “TCS” (hydrogen sensor) or “ZR5” (oxygen sensor) again and open the appropriate COM port. The “Calibration” section is located in the upper right corner.

Hydrogen sensor

NOTE

All calibrations must be carried out at the process pressure for which the sensor was set before delivery. In case of disregard, extreme changes of the characteristic curve will occur.

NOTE

The sensor is usually calibrated for measuring the hydrogen concentration in pure nitrogen (carrier gas) before delivery.

The user must perform a zero-point calibration at regular intervals (at least once a year). This means that an offset adjustment is performed in a hydrogen-free carrier gas. In the same way, a second point with a known hydrogen concentration (“span gas”) can also be calibrated (e.g., the hydrogen concentration prevailing in the process).

Before calibration, the sensor should have been purged with the test gas for at least 15 minutes (clean air or test gas with a known H_2 concentration, e.g., 90/10 reforming gas). After sufficient purging with clean (hydrogen-free) air, click “Cali Zero Point.” The measured H_2 concentration must then be 0 v.%. For range gas calibration (span gas), first enter the test gas cylinder value in the “Span Gas Value (v.%)” field. After sufficiently purging the sensor with the test gas, perform the calibration by clicking “Cali Span Gas.”

For each calibration, the same carrier gas (residual gas other than hydrogen) should be used as is present in the process, since any change in the gas composition affects thermal conductivity (see Section 3.1).

The end user cannot directly set the zero point and range calibration values. However, if an error occurred during calibration and it is necessary to reset the values to their factory defaults, please contact the manufacturer.

If this calibration is not performed, the sensor will still be operational, but the measured values will no longer fall within the error limits specified in this manual (see Chapter 5.7).

Oxygen sensor

The “Calibration” section displays the stored asymmetry voltage (zero point). The asymmetry voltage is caused by thermal effects (non-isothermal electrodes). This voltage can be adjusted by clicking the “Cali Zero Point” button. The device should be operated in clean ambient air for at least 10 minutes before performing the asymmetry adjustment. Clicking “Reset Zero Point” resets the stored asymmetry voltage.

5.6 Data collection and further processing

To record and process the measured values, a new window can be opened using ‘Plot’. Before starting the measurement, you can set the frequency at which the measured values are to be sampled, in seconds (Sample Time). Recording is started by clicking ‘Start’; it can be paused and resumed using ‘Pause’ and ‘Resume’, and stopped using ‘Stop’. When starting the measurement, you must select a save location for the recorded data. The data is saved in a .csv file in accordance with the number format selected when the programme was launched (see Figure 6). The recorded values are displayed continuously in the graph. The value shown can be selected from the menu at the bottom right. Regardless of this, all values are saved in the .csv file.



Figure 9: Data logging

5.7 Accuracy of measurement

Hydrogen

The manufacturer guarantees a measurement error of less than ± 5 % relative to the displayed measured value plus additional ± 0.3 vol.% absolute.

However, this measurement accuracy can only be achieved if the following conditions are taken into account:

- Ensure good mixing of the sample gas.
- All gas supply lines and discharge lines must be absolutely tight.
- Any change in the gas composition (i.e. also a change in the concentration ratios of the gas components in addition to hydrogen) will in principle affect the measurement result (see sec. 3.1). Gases with high thermal conductivities play a particularly important role here. The measurement error described only applies to binary gas mixtures.
- All calibrations must be conducted at the preset process pressure, because the measured value is pressure-dependent.

Oxygen

The manufacturer guarantees a measurement error of less than ± 5 % relative to the displayed measured value plus additional ± 1 vol.ppm absolute.

When measuring oxygen concentrations < 10 ppm, the following aspects must be taken into account by the user when evaluating the measured value:

- Composition of the sample gas.
- Specific features of the production process (e.g. accompanying components).
- Temperature of the sample gas.

To minimize the measuring error at low oxygen concentrations, the following requirements must be met:

- The measuring gas must be taken from a location where the measuring gas has a homogeneous concentration of its substances.
- The pipe from the measuring point to the device must be as short as possible in order to avoid a change in the chemical balance in the pipe.
- All gas inlet and outlet pipes must be free of leaks.
- For measurements of oxygen concentrations of less than 100 ppm, the use of steel tubes is necessary.
- If the measured gas contains reducing components (e.g. hydrogen), the concentration of free oxygen cannot be determined directly (see sec. 3.2).

6 Fault clearance

Hydrogen measurement

Fault	Cause	Clearance
No output signal	Power supply failed	Check power supply, check pin assignment of the socket
	Sensor temperature too low	Check power supply
	System error, general device error	Inform customer service
Higher measuring value than expected	System contains additional gas compounds with high thermal conductivity coefficient	Contact service, check the general suitability of the system for the measuring task
Measuring value is considerably lower than expected	Leaks	Check sealings

Oxygen measurement

The LED on the device only applies to the oxygen measuring cell.

Fault	Cause	Clearance
LED is off or red	No power supply or no sufficient operating voltage	Check power supply
	Device fuse tripped	Wait for self-resetting If repeatedly tripping, contact service
Set temperature of the measuring cell has not been reached (LED flashes red)	Measuring cell has not yet reached operating temperature when switched on	Wait 5 minutes
	Heating or control defective	Inform customer service
	Thermocouple defective	Inform customer service
	Flow rate too high	Reduce flow rate
Display „no data“ or „ERROR NO CONNECT“	No communication between PC and module	Check COM-port Use another cable Check connections
	Wrong COM-port	
	Serial cable defective	
	Cable incorrectly plugged	
	Wrong serial cable	
	Serial interface defective	Inform customer service
Measuring value is significantly higher than expected	Leaks in the gas supply	Check gas connections
	Flow too low	Flow within the specified range?
	Measuring cell broken (e.g. too much gas or penetration of condensate)	Inform customer service
Measuring value is significantly lower than expected	Components reacting with oxygen in measuring gas (e.g. hydrogen, hydrocarbons)	Interpret cell voltage on the basis of sec. 3.2

7 Warranty conditions

ZIROX Sensoren und Elektronik GmbH warrants that the products manufactured and sold are free from manufacturing and material defects at the time of dispatch. In case of defects and faults within 12 months (probe) and 24 months (electronics assembly) respectively after dispatch, ZIROX will clear faults at its own option by repair or replacement. The purchaser must give prompt written notice to ZIROX. The purchaser is not entitled to claim other legal remedies based on this warranty.

ZIROX does not warrant supplied products, which are subject to normal wear and tear (e.g. reference gas pump).

Corrosive gases and solid particles may cause damage and require repair or replacement due to normal wear and tear.

The contact of the products with explosive gas compounds, halogens in high concentrations and sulphuric gases (e.g. SO_2) is not permitted.

The contact of the products with siliconic or phosphoric compounds is not permitted either.

A connection of ZIROX and non-ZIROX products voids any warranty claims.

Warranty and warranty claims are only accepted if they are in accordance with the "General Sales and Delivery Conditions" of the manufacturer.

Warranty and liability claims for damage to persons and/or property are void if they are subject to the following:

- Normal wear and tear
- Improper use of the product
- Disregard of the manual’s instructions
- Improper installation, initiation, operation and maintenance of the product
- Operation of the product without protective measures
- Unauthorized functional and technical modification of the product
- Dismantling of parts as well as installation of spare parts or additional units, which are not delivered or permitted by the manufacturer
- Improper repairs or faulty operation
- External impact
- Acts of God



When installing the equipment, the customer must ensure that all necessary supply lines are connected and the operating temperature of the probe is reached. Experience has shown that products installed but not in use may be damaged by the process or by external influence. ZIROX will not accept any responsibility for such damage.

8 Mounting instructions for Fitok®-fittings

Installation Instructions

For FITOK Tube Fittings up to 1 in. (25mm) O.D.

■ Installation

1 Insert the tube into the tube fitting. Make sure the tubing rests firmly on the shoulder of the fitting body. Finger tight the nut. (Fig. 1)

For High-Pressure Applications and High Safety-Factor Systems:
Further tighten the nut with a wrench until the tubing could not be turned by hand or moved axially in the fitting before Step 2 and Step 3.

2. Mark the nut at 6 o'clock position. (Fig. 2)

3. For tube fittings below or equal to 3/16" (4mm) O.D., tighten the nut 3/4 turn to 3 o'clock position, while holding the fitting body steady. For tube fittings above 3/16" (4mm) O.D., tighten the nut with 1-1/4 turns to 9 o'clock position. (Fig.3)

FITOK

■ Gaugeability

For initial installation, the FITOK Gap Inspection Gauge helps to judge whether the fitting has been sufficiently tightened by trying to enter the FITOK gap inspection gauge into the gap between the nut and body. (Fig. 4)

- If the gauge could not enter the gap, the fitting is sufficiently tightened.
- If the gauge enters into the gap, additional tightening is required.

■ Reassembly

The FITOK tube fittings can be disassembled and reassembled for multiple times. Prior to disassembly, make sure to mark a straight line along the tubing, the nut and the fitting body to ensure the reassembled fittings are properly tightened. (Fig. 5)

1. Insert tubing with the presetted ferrules into the fitting body until the front ferrule seats.
2. While holding the fitting body steady, rotate the nut with a wrench back to the original position as indicated by the marks on the tubing and the fitting body. At this point, there shall be a significant increase in resistance. (Fig. 6)
3. Tighten the nut slightly further with a wrench so as to complete the reassembly.

▲ **The FITOK Gap Inspection Gauge is not applicable to reassembled fittings.**


Fig. 1

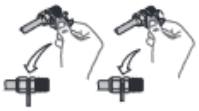
Fig. 4


Fig. 2


Fig. 5

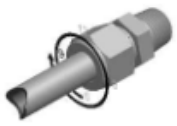
Fig. 3


Fig. 6

Presetter Tool

1. Install the nut and ferrules onto the presetter tool.
2. Insert tubing into the presetter tool, make sure the tube rests firmly on the shoulder of the presetter tool, then rotate the nut finger-tight.
3. Assemble the fitting as per installation instructions. Fig. 7.
4. Loosen the nut and insert the tubing with preset ferrules into the fitting body. Fig. 8.
5. Reassemble as stated in the reassembly instructions. Fig. 9.

■ Plugs and Port Connectors

1. While holding the fitting body steady, tighten the plug and the machined ferrule end of port connector one-quarter turn from the finger-tight position. Fig. 10 & Fig. 11.

For 1/16, 1/8, and 3/16 in.; 2, 3, and 4 mm tube fittings, tighten the plug and the machined ferrule end of port connector one-eighth turn. For over 1 in. and over 25 mm tube fittings, tighten the plug and the machined ferrule end of port connector one-quarter turn.

2. For the tube adapter end of port connector, assemble as per installation instructions. Fig. 12.


Fig. 7


Fig. 8


Fig. 9


Fig. 11


Fig. 10


Fig. 12

■ Reassembly of Plugs and Port Connectors

1. Make subsequent connections by slightly tightening with a wrench after snugging the nut by hand.
2. For the tube adapter end of port connector, reassemble as stated in the reassembly instructions.

Over 1 in. (25 mm) sizes require use of a hydraulic presetting unit to preset the ferrules onto the tubing.

◀ Safety Precautions

1. Do not assemble and tighten fittings when system is pressurized.
2. Do not bleed system by loosening fitting nut or fitting plug.
3. Make sure that the tubing rests firmly on the shoulder of the tube fitting body before tightening the nut.
4. Always use proper thread sealants or lubricants on taperd pipe thread.
5. Never turn fitting body. Instead, hold the body and turn the nut.

6. Metal tubing material should be softer than fitting material.
7. When tubing and fittings are made of the same material, tubing must be fully annealed.
8. Extremes of wall thickness should always be checked against the suggested minimum and maximum wall thickness limitations.
9. Always leave enough lengh of straight tube between the tube bend and the fitting.
10. Always use an insert with extremely soft or pliable plastic tubing.
11. Surface finish is very important to proper sealing, particulary in gas service.
12. Tubing that is oval and will not easily fit through fitting nuts, ferrules, and bodies should never be forced into the fitting.

FITOK Group

FITOK GmbH
Sprendlinger Landstr. 115, 63069 Offenbach am Main, Germany
Tel.: +49 69 8900 4498 Fax: +49 69 8900 4495

FITOK, Inc.
13843 North Promenade Blvd., Suite 750, Stafford, Texas 77477, USA
Tel.: +1 281 888 0077 Fax: +1 281 582 4051

FITOK (Wuhan) Incorporated
Zhongbai Yangguo Industrial Park, Hanshi Road, Xiruhou District,
Wuhan, Hubei Province, 430415, China
Tel.: +86 27 8983 8988 Fax: +86 27 8983 8980

FITOK (Shenzhen) Incorporated
No.164 Xinqu Village, Tiantou Community, Shijing Street,
Pingshan District, Shenzhen 518118, China
Tel.: +86 755 2803 2500 Fax: +86 755 2803 2619

FITOK (Suzhou) Metal Products Co., Ltd.
No. 29 Changcheng Road, Yangyuan Industrial Park, Xinzhuang
Town, Changshu, Jiangsu 215562, China
Tel.: +86 512 5247 9001 Fax: +86 512 5247 9002

FITOK Middle East Oil Equipment Trading LLC
Makateb Building, P.O. Box 185412, Airport Road, Deira, Dubai, UAE
Tel.: +971 4 2959 853 Fax: +971 4 2959 854

info@fitokgroup.com
www.fitokgroup.com

ABS CRN DVGW DOT

Source:
www.fitokgroup.com/tmp/file/Installation_Instructions_up_to_1_in.(25mm)_EN.pdf
If you have any questions about the fittings, please contact the manufacturer.

9 Declaration of conformity

EG - Konformitätserklärung

Dokument- Nr.: **30** **Mai 2024**

Hersteller: **Zirox Sensoren & Elektronik GmbH**

Anschrift: **Am Koppelberg 21**
D - 17489 Greifswald

Produktbezeichnung: **SWM1000 (E714 und E720)**

Die Übereinstimmung des bezeichneten Produktes mit den Vorschriften der Richtlinien des Rates

2006/108/EG Elektromagnetische Verträglichkeit

2006/95/EG Elektrische Betriebsmittel zur Verwendung innerhalb bestimmter Spannungsgrenzen (Niederspannungsrichtlinie)

wird nachgewiesen durch:

Der Hersteller hat die in den oben aufgeführten Richtlinien genannten harmonisierten Normen angewandt und die Übereinstimmung des Produktes festgestellt.

harmonisierte europäische Normen:

Nummer:	Text:
DIN EN 61000-6-2	Elektromagnetische Verträglichkeit (EMV) Teil 6-2: Fachgrundnorm: Störfestigkeit für Industriebereich
DIN EN 61326	leitungsgeführte Störaussendung Gestrahlte Störaussendung

Diese Erklärung bescheinigt die Übereinstimmung mit der genannten Richtlinie, beinhaltet jedoch keine Zusicherung von Eigenschaften. Die Sicherheitshinweise der mitgelieferten Produktdokumentation sind zu beachten.

Aussteller: **Zirox Sensoren & Elektronik GmbH**

Ort, Datum: Greifswald 30.5.2024

Rechtsverbindliche Unterschrift: .....