ZIROX - Oxygen Measuring Technology

Oxygen Probe MS27

Manual

Range: 1000 vol-ppm … 20.6 vol%

ZIROX Sensoren & Elektronik GmbH

Am Koppelberg 21, 17489 Greifswald, Germany, ☎+49 3834 8309-00, fax: -29, E-mail: info@zirox.de

Table of contents

1. General description and application

The oxygen probe MS27, based on a potentiometric zirconia cell, serves the measurement of the oxygen concentration in protective and process gases. The lowest measureable oxygen concentration is 1000 ppm (traces must be measured by SS27). It is available with flange DN40KF or external thread M18 x 1.5. The insert length is 80 mm (DNKF40) or 50mm (M18 x 1.5).

The probe contains an integrated electronics with controlled sensor heater. The output of the probe is a standard signal 4...20 mA (or 0…5V, 0…10V; in this cases the display is not utilizable) corresponding to the cell voltage range according to the *NERNST* equation. A display for the direct indication of the oxygen concentration is available as accessory.

The type of output signal is preset according to customer's request.

Green LED indicates ready state. Red LED signalizes the correct power supply.

2. Technical data

Measuring range	20.6 vol%...1000 vol-ppm)
Accuracy	Relative error < 10 %
Output	4…20 mA [corresponds to the probe raw signal (cell voltage) 0…200 mV][1]
Visual signals (connection head)	Red: power supply ON Green: sensor temperature reached
Sensor temperature	700 °C (controlled electronically)
Warm-up time	Approx. 5 min
Response time	T_{90} < 15 sec (depends on gas flow and oxygen concentration gradient)
Power supply	24 V DC +/- 10 %, approx. 17 VA
Exhaust gas temperature, gas flow, sensor temperature	**< 300 °C**, at probe head < 50°C, rH < 80 %, flow < 10 m/sec
Leak rate	10^{-6} mbar l sec^{-1}
Protective degree	IP 52 (others on request)
Storage conditions	- 10...50 °C, rH < 85 %
Dimensions (probe)	∅ 10 mm, length 65 (M18 x 1.5), 75 mm (DN40KF), others on request
Dimensions (connection head)	64 x 58 x 36 mm (l x w x h)
Weight	0.4 kg
Cross-sensitivity	None, but combustible gas components consume oxygen; the equilibrium oxygen concentration is measured
Pressure dependence	If no normal pressure: correct measuring value by: real value = measured value x gas pressure / 101,325 Pa
Typical offset	2…8 mV (compensable)
Ready signal	Open collector (OC max. 0.5 A, 45 V), **the current output does not go to zero in case of error**

[1] Option: 0…5 V or 0…10 V

3. Installation and operation

First, the probe is to be connected with the power supply in clean air. Therefore, it is necessary to open the connection head and to connect the cable according to the schema (see page 5, **the minus poles of the power supply and the analog output must be connected separately to clamp 4**).

The probe is heated up electrically. Please note: the sensor in the probe front is very hot!

ATTENTION

After approx. 5 minutes the sensor reaches the operating temperature of 700°C, the LED is green. In this case, the offset can be controlled and, if necessary, corrected by potentiometer on the electronic plate. The current output in air should be 4 mA.

After that, the probe can be mounted into the exhaust pipe. During the measurement, the user should take note that the accuracy of the measurement is depending on the gas flow (electrode cooling by high gas flow). The gas flow should be lower than 10 m/sec.

The oxygen partial pressure is calculated according to the *NERNST* equation:

$$\varphi(O_2) = 20.64 * e^{(-46.42\ U/T)}$$

$\varphi(O_2)$	oxygen concentration in vol%
U	cell voltage in mV
T	sensor temperature in K (700 °C = 973.15 K)
20.64	O_2-concentration in air at 50 % rH

Translation of the output signal (range 0...200mV):

Current output 4-20 mA:	1 mA = 12,5 mV cell voltage
Voltage output 0-5 V:	1 V = 40 mV cell voltage
Voltage output 0-10 V:	1 V = 20 mV cell voltage

(The cell voltage has to be used in the *NERNST* equation).

Example for current output of 4-20 mA: At a current of 5.5 mA ((5.5-4) x 12.5 mV = **18.75** mV) an oxygen concentration $\varphi(O_2)$ = 8.43 vol% results.

Zero point adjustment

After a longer use, agings can cause slight changes of the asymmetry voltage (offset) of the measuring cell. During measurements in air, a deviating value of 0 V or 4 mA can be displayed. This mistake can be corrected with the potentiometer on the electronic plate in the connecting head. An operation time of approx. 1 hour is required for the heater of the probe before the adjustment.

Display (optional)

A display (GIA 20 EB, Greisinger) is available.

The device needs 24 V DC as power supply.

For further information see www.greisinger.de!

Display connections, clamps 3, 5 and 7 are connected inside

11 EASYBUS-Interface
10 EASYBUS-Interface
9 Input: 0-1V, 0-2V**, mA**
8 Input: 0-50mV
7 Input: GND
6 Input: 0-10V
5 Power supply GND
4 Power supply +Uv
3 Relay output GND
2 Relay output 2
1 Relay output 1

Clamp assignment (probe connection head):

Clamp	Description
1	+ U_B (24 V)
2	Output 4 - 20 mA
3	Ready*
4	GND

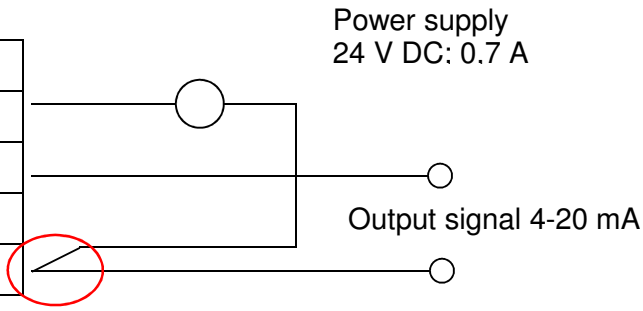

Power supply and signal output must be carried to the clamp separately!

The electronics does not have any connection to the housing!

*) Switching transistor (type BCX 55, npn-type). Charge must be connected vs. power supply (+ U_B). No recovery diode! Limits: 45 V, 0.5 A. Output is active (in „ready“-state conductive).

Connector pinout (type of connector: Binder series 768 M8x1)

Pin number	Name	Clamp (connection head)	Colour (cable ≤ 5m, pre-produced)	Colour (cable > 5m, pre-produced)
1	+ I_{output}	2	brown	brown
2	GND I_{output}	4	white	white
3	GND $U_{power\ supply}$	4	blue	green
4	+24 V $U_{power\ supply}$	1	black	yellow
5	RDY	3	grey	grey

4. Drawings

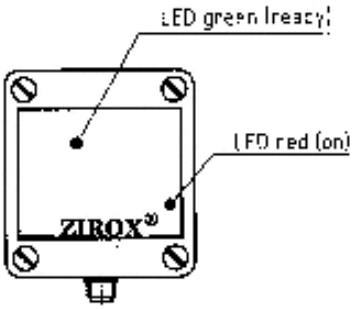

Connection head

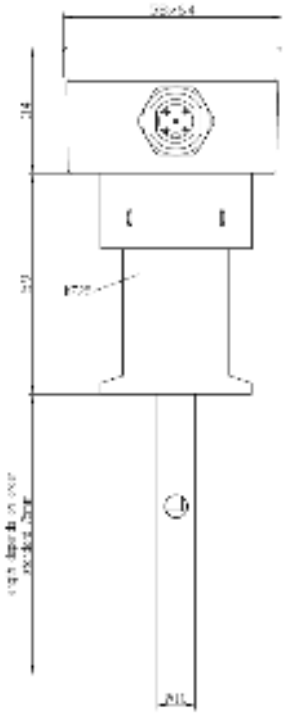

Probe MS27 with DN40KF

Scheme of display connections

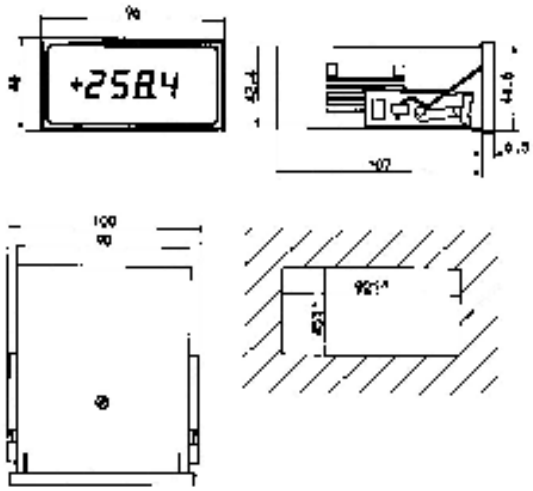

Display dimensions

5. Warranty conditions

ZIROX Sensoren & Elektronik GmbH warrants that the products manufactured and sold are free from manufacturing and material defects at the time of dispatch. In case of defects and faults within 12 months (probe) and 24 months (electronics assembly) respectively after dispatch, ZIROX will clear faults at its own option by repair or replacement. The purchaser must give prompt written notice to ZIROX. The purchaser is not entitled to claim other legal remedies based on this warranty.

ZIROX does not warrant supplied products, which are subject to normal wear and tear (e.g. reference gas pump).

Corrosive gases and solid particles may cause damage and require repair or replacement due to normal wear and tear.

The contact of the products with explosive gas compounds, halogens in high concentrations and sulphuric gases (e.g. SO_2) is not permitted.

The contact of the products with siliconic or phosphoric compounds is not permitted either.

A connection of ZIROX and non-ZIROX products voids any warranty claims.

Warranty and warranty claims are only accepted if they are in accordance with the "General Sales and Delivery Conditions" of the manufacturer.

Warranty and liability claims for damage to persons and/or property are void if they are subject to the following:

- Normal wear and tear
- Improper use of the product
- Disregard of the manual's instructions
- Improper installation, initiation, operation and maintenance of the product
- Operation of the product without protective measures
- Unauthorized functional and technical modification of the product
- Dismantling of parts as well as installation of spare parts or additional units which are not delivered or permitted by the manufacturer
- Improper repairs or faulty operation
- External impact
- Acts of God

Attention: During installation of the equipment, the customer must ensure that all necessary supply lines are connected and the operating temperature of the probe is reached. Experience has shown that products installed but not in use may be damaged by the process or by external influence. ZIROX will not accept any responsibility for such damage.

6. Example graphs: oxygen concentration vs. output signal

Oxygen concentration in dependence on the output signal (4...20 mA, 0...5 V, 0...10V; range 0...200 mV)

If the oxygen concentration is needed in ppm, 1 vol% = 10000 ppm!

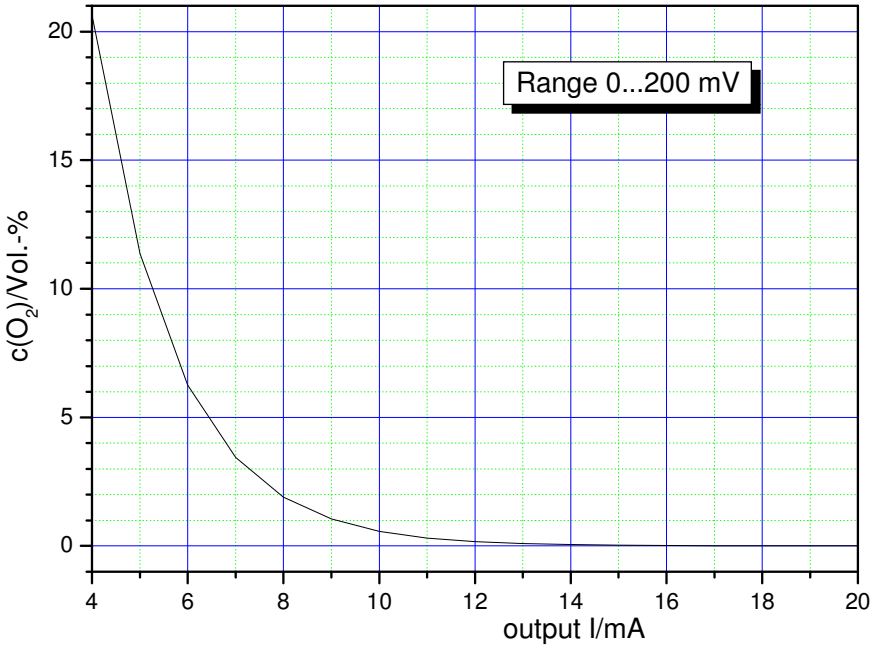

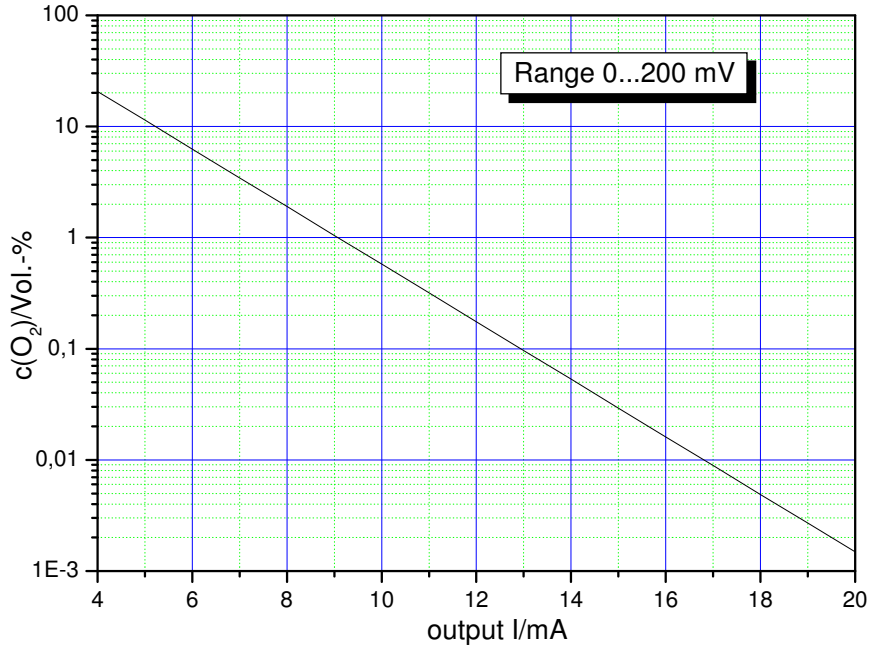

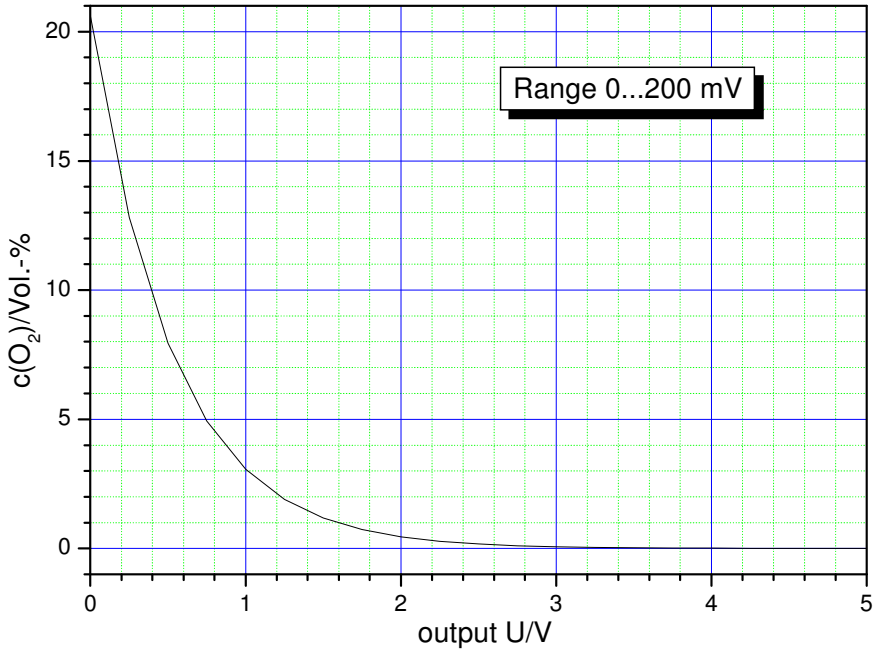
Range 0...200 mV
c(O2)/Vol.-%
20
15
10
5
0
0
1
2
3
4
5
output U/V

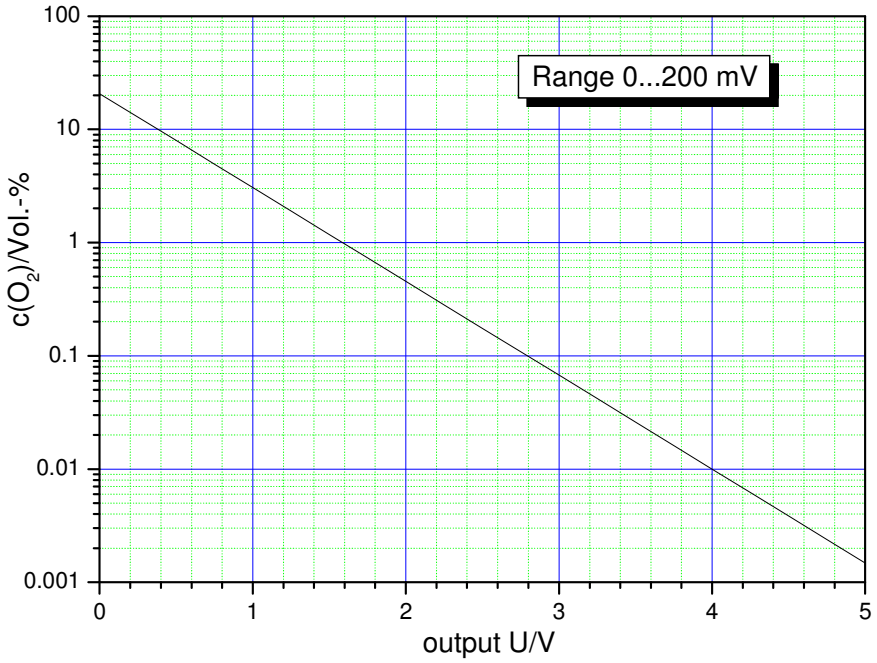
Range 0...200 mV
c(O2)/Vol.-%
100
10
1
0.1
0.01
0.001
0
1
2
3
4
5
output U/V

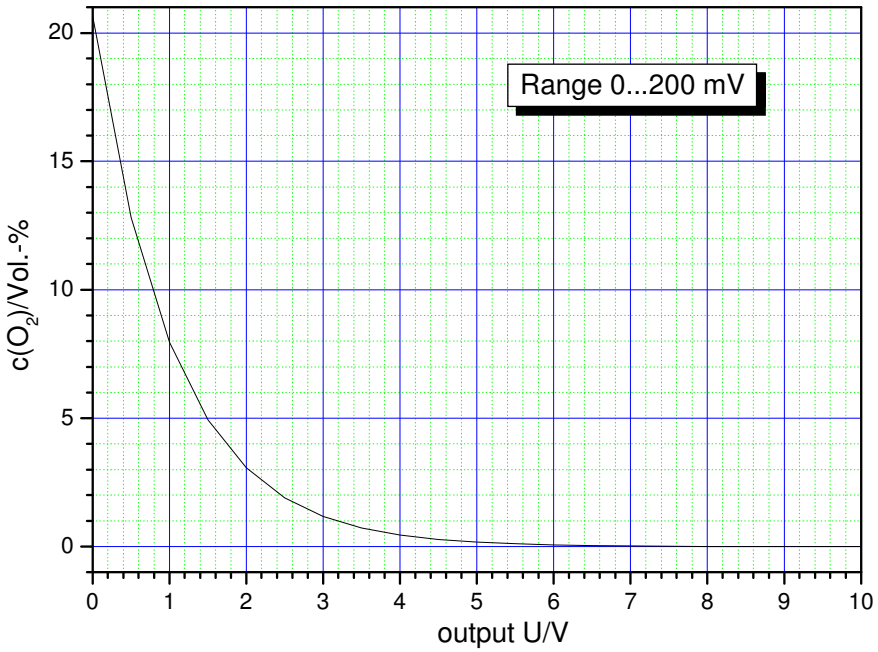
Range 0...200 mV
c(O2)/Vol.-%
20
15
10
5
0
0
1
2
3
4
5
6
7
8
9
10
output U/V

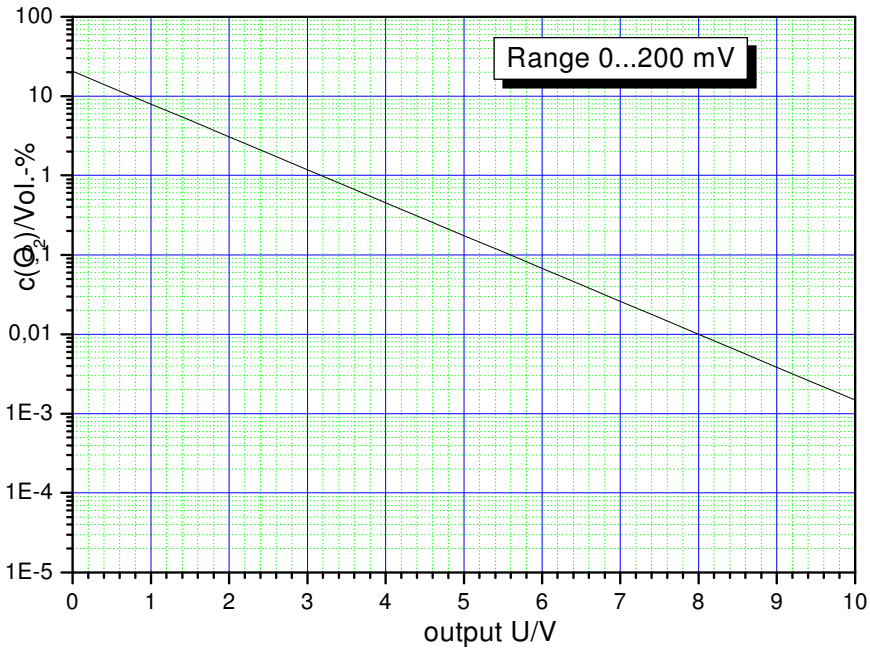
Range 0...200 mV
c(O2)/Vol.-%
100
10
1
0,1
0,01
1E-3
1E-4
1E-5
0
1
2
3
4
5
6
7
8
9
10
output U/V

7. EU Declaration of conformity

EG - Konformitätserklärung

Dokument- Nr.: 08 **Monat / Jahr:** Oktober 2009

Hersteller: Zirox Sensoren & Elektronik GmbH

Anschrift: Am Koppelberg 21
D - 17489 Greifswald

Produktbezeichnung: MS27/SS27 mit Transmitter E 610

Die Übereinstimmung des bezeichneten Produktes mit den Vorschriften der Richtlinie des Rates
2004/108/EG
wird nachgewiesen durch:

Der Hersteller hat die in der Richtlinie 2004/108/EG genannten harmonisierten Normen angewandt und die Übereinstimmung des Produktes festgestellt.

harmonisierte europäische Normen:

Nummer:	Text:	Ausgabedatum:
EN 55022	Einrichtungen der Informationstechnik - Funkstörungeigenschaften - Grenzwerte und Messverfahren	2006
EN 61000-6-2	Elektromagnetische Verträglichkeit (EMV) Teil 6-2: Fachgrundnormen: Störfestigkeit für Industriebereiche	2005
EN 61000-6-4	Elektromagnetische Verträglichkeit (EMV) Teil 6-4: Fachgrundnormen: Störaussendung - Industriebereich	2007

Diese Erklärung bescheinigt die Übereinstimmung mit der genannten Richtlinie, beinhaltet jedoch keine Zusicherung von Eigenschaften. Die Sicherheitshinweise der mitgelieferten Produktdokumentation sind zu beachten.

Aussteller: Zirox Sensoren & Elektronik GmbH

Ort, Datum: Greifswald 29.10.2009

Rechtsverbindliche Unterschrift: .....

ZIROX
Sensoren & Elektronik GmbH
Am Koppelberg 21
17489 Greifswald